DAQ

SCXI™-2400 User Manual

Serial Interface Module

June 1996 Edition
Part Number 321231A-01

© Copyright 1996 National Instruments Corporation. All Rights Reserved.

Internet Support

GPIB: `gpib.support@natinst.com`
DAQ: `daq.support@natinst.com`
VXI: `vxi.support@natinst.com`
LabVIEW: `lv.support@natinst.com`
LabWindows: `lw.support@natinst.com`
HiQ: `hiq.support@natinst.com`
`VISA: visa.support@natinst.com`
`Lookout: lookout.support@natinst.com`
E-mail: `info@natinst.com`
FTP Site: `ftp.natinst.com`
Web Address: `http://www.natinst.com`

Bulletin Board Support

BBS United States: (512) 794-5422 or (800) 327-3077
BBS United Kingdom: 01635 551422
BBS France: 1 48 65 15 59

FaxBack Support

(512) 418-1111

Telephone Support (U.S.)

Tel: (512) 795-8248
Fax: (512) 794-5678

International Offices

Australia 03 9 879 9422, Austria 0662 45 79 90 0, Belgium 02 757 00 20,
Canada (Ontario) 519 622 9310, Canada (Québec) 514 694 8521, Denmark 45 76 26 00,
Finland 90 527 2321, France 1 48 14 24 24, Germany 089 741 31 30, Hong Kong 2645 3186,
Italy 02 413091, Japan 03 5472 2970, Korea 02 596 7456, Mexico 95 800 010 0793,
Netherlands 0348 433466, Norway 32 84 84 00, Singapore 2265886, Spain 91 640 0085,
Sweden 08 730 49 70, Switzerland 056 200 51 51, Taiwan 02 377 1200, U.K. 01635 523545

National Instruments Corporate Headquarters

6504 Bridge Point Parkway Austin, TX 78730-5039 Tel: (512) 794-0100

Important Information

Warranty

The SCXI-2400 is warranted against defects in materials and workmanship for a period of one year from the date of shipment, as evidenced by receipts or other documentation. National Instruments will, at its option, repair or replace equipment that proves to be defective during the warranty period. This warranty includes parts and labor.

A Return Material Authorization (RMA) number must be obtained from the factory and clearly marked on the outside of the package before any equipment will be accepted for warranty work. National Instruments will pay the shipping costs of returning to the owner parts which are covered by warranty.

National Instruments believes that the information in this manual is accurate. The document has been carefully reviewed for technical accuracy. In the event that technical or typographical errors exist, National Instruments reserves the right to make changes to subsequent editions of this document without prior notice to holders of this edition. The reader should consult National Instruments if errors are suspected. In no event shall National Instruments be liable for any damages arising out of or related to this document or the information contained in it.

EXCEPT AS SPECIFIED HEREIN, NATIONAL INSTRUMENTS MAKES NO WARRANTIES, EXPRESS OR IMPLIED, AND SPECIFICALLY DISCLAIMS ANY WARRANTY OF MERCHANTABILITY OR FITNESS FOR A PARTICULAR PURPOSE. CUSTOMER'S RIGHT TO RECOVER DAMAGES CAUSED BY FAULT OR NEGLIGENCE ON THE PART OF NATIONAL INSTRUMENTS SHALL BE LIMITED TO THE AMOUNT THERETOFORE PAID BY THE CUSTOMER. NATIONAL INSTRUMENTS WILL NOT BE LIABLE FOR DAMAGES RESULTING FROM LOSS OF DATA, PROFITS, USE OF PRODUCTS, OR INCIDENTAL OR CONSEQUENTIAL DAMAGES, EVEN IF ADVISED OF THE POSSIBILITY THEREOF. This limitation of the liability of National Instruments will apply regardless of the form of action, whether in contract or tort, including negligence. Any action against National Instruments must be brought within one year after the cause of action accrues. National Instruments shall not be liable for any delay in performance due to causes beyond its reasonable control. The warranty provided herein does not cover damages, defects, malfunctions, or service failures caused by owner's failure to follow the National Instruments installation, operation, or maintenance instructions; owner's modification of the product; owner's abuse, misuse, or negligent acts; and power failure or surges, fire, flood, accident, actions of third parties, or other events outside reasonable control.

Copyright

Under the copyright laws, this publication may not be reproduced or transmitted in any form, electronic or mechanical, including photocopying, recording, storing in an information retrieval system, or translating, in whole or in part, without the prior written consent of National Instruments Corporation.

Portions, copyright 1989-1996 Datalight, Inc. All rights reserved.

Trademarks

ComponentWorks®, LabVIEW®, NI-DAQ®, and SCXI™ are trademarks of National Instruments Corporation.

Product and company names listed are trademarks or trade names of their respective companies.

WARNING REGARDING MEDICAL AND CLINICAL USE OF NATIONAL INSTRUMENTS PRODUCTS

National Instruments products are not designed with components and testing intended to ensure a level of reliability suitable for use in treatment and diagnosis of humans. Applications of National Instruments products involving medical or clinical treatment can create a potential for accidental injury caused by product failure, or by errors on the part of the user or application designer. Any use or application of National Instruments products for or involving medical or clinical treatment must be performed by properly trained and qualified medical personnel, and all traditional medical safeguards, equipment, and procedures that are appropriate in the particular situation to prevent serious injury or death should always continue to be used when National Instruments products are being used. National Instruments products are NOT intended to be a substitute for any form of established process, procedure, or equipment used to monitor or safeguard human health and safety in medical or clinical treatment.

Table of Contents

About This Manual

Organization of This Manual vii
Conventions Used in This Manual viii
National Instruments Documentation ix
Customer Communication x

Chapter 1
Introduction

About the SCXI-2400 1-1
What You Need to Get Started 1-1
Software Programming Choices 1-2
LabVIEW and LabWindows/CVI Application Software 1-2
NI-DAQ Driver Software 1-2
Optional Equipment 1-4
Unpacking 1-4

Chapter 2
Configuration and Installation

Module Configuration 2-1
HDLC Address Selection 2-1
Baud Rate Selection 2-1
Hardware Installation 2-3
Cable Installation 2-4
Parallel Port Cable 2-4
Serial Port Cable 2-4
RS-232 Cable 2-5
RS-485 Cable 2-6
Indicator Lights 2-7

Appendix A
Specifications

Appendix B
Customer Communication

Glossary

Index

Figures

Figure 1-1. The Relationship between the Programming Environment, NI-DAQ, and Your Hardware 1-3

Figure 2-1. Baud Rate and Address Setting Examples 2-3
Figure 2-2. RS-485 Connections for Two Chassis with SCXI-2400 Modules 2-6

Tables

Table 2-1. SCXI-2400 Baud Rate Settings.....2-2
Table 2-2. RS-232 Signal Connections.....2-5
Table 2-3. RS-485 Signal Connections.....2-6
Table 2-4. Front Panel LED Indicators.....2-7
Table 2-5. SCXI-2400 Troubleshooting 2-8

About This Manual

This manual describes the electrical and mechanical aspects of the SCXI-2400 and contains information concerning its installation and operation. With the SCXI-2400 serial interface module, you can control your SCXI chassis through the RS-232 or RS-485 port on your computer.

Organization of This Manual

The *SCXI-2400 User Manual* is organized as follows:

- Chapter 1, *Introduction*, describes the SCXI-2400, lists what you need to get started with your SCXI-2400, the optional software, the optional equipment, and explains how to unpack the SCXI-2400.
- Chapter 2, *Configuration and Installation*, describes how to configure the SCXI-2400 switches and how to install the SCXI-2400 into the SCXI chassis.
- Appendix A, *Specifications*, lists the specifications for the SCXI-2400.
- Appendix B, *Customer Communication*, contains forms you can use to request help from National Instruments or to comment on our products.
- The *Glossary* contains an alphabetical list and description of terms used in this manual, including abbreviations, acronyms, metric prefixes, mnemonics, symbols, and terms.
- The *Index* contains an alphabetical list of key terms and topics in this manual, including the page where you can find each one.

Conventions Used in This Manual

The following conventions are used in this manual.

bold Bold text denotes LEDs.

bold italic Bold italic text denotes a note, caution, or warning.

italic Italic text denotes emphasis, a cross reference, or an introduction to a key concept.

`monospace` Denotes text or characters that are to be literally input from the keyboard, sections of code, programming examples, and syntax examples. This font is also used for the proper names of disk drives, paths, directories, programs, subprograms, subroutines, device names, functions, variables, filenames, and extensions, and for statements and comments taken from program code.

SCXIbus Refers to the backplane in the chassis. A signal on the backplane is referred to as the SCXIbus <signal name> line (or signal). The SCXIbus descriptor may be omitted when the meaning is clear. Descriptions of all SCXIbus signals are in Chapter 3, *Signal Connections*.

Slot 0 Refers to the power supply and control circuitry in the SCXI chassis.

Abbreviations, acronyms, metric prefixes, mnemonics, symbols, and terms are listed in the *Glossary*.

National Instruments Documentation

The *SCXI-2400 User Manual* is one piece of the documentation set for your DAQ

system. You could have any of several types of manuals, depending on the hardware and software in your system. Use the manuals you have as follows:

- *Getting Started with SCXI*—This is the first manual you should read. It gives an overview of the SCXI system and contains the most commonly needed information for the modules, chassis, and software.
- Your SCXI hardware user manuals—Read these manuals next for detailed information about signal connections and module configuration. They also explain in greater detail how the module works and contain application hints.
- Your DAQ hardware user manuals—These manuals have detailed information about the DAQ hardware that plugs into or is connected to your computer. Use these manuals for hardware installation and configuration instructions, specification information about your DAQ hardware, and application hints.
- Software documentation—Examples of software documentation you may have are the LabVIEW and LabWindows®/CVI documentation sets and the NI-DAQ documentation. After you set up your hardware system, use either the application software (LabVIEW or LabWindows/CVI) or the NI-DAQ documentation to help you write your application. If you have a large and complicated system, it is worthwhile to look through the software documentation before you configure your hardware.
- Accessory installation guides or manuals—If you are using accessory products, read the terminal block and cable assembly installation guides. They explain how to physically connect the relevant pieces of the system. Consult these guides when you are making your connections.
- SCXI chassis manuals—Read these manuals for maintenance information on the chassis and installation instructions.

Customer Communication

National Instruments wants to receive your comments on our products and manuals. We are interested in the applications you develop with our products, and we want to help if you have problems with them. To make it easy for you to contact us, this manual contains comment and configuration forms for you to complete. These forms are in Appendix B, *Customer Communication*, at the end of this manual.

Introduction

Chapter 1

This chapter describes the SCXI-2400, lists what you need to get started with your SCXI-2400, the optional software, the optional equipment, and explains how to unpack the SCXI-2400.

About the SCXI-2400

The SCXI-2400 is a module that controls the SCXI chassis with your computer's serial port. The SCXI-2400 includes an RS-232 port for direct connection to the serial port of a PC, and an RS-485 port for long distance, multichassis system configuration. The module can operate in any SCXI chassis.

Detailed specifications of the SCXI-2400 are listed in Appendix A, *Specifications*.

What You Need to Get Started

To set up and use your SCXI-2400, you will need the following items:

- ❑ SCXI-2400 module
- ❑ *SCXI-2400 User Manual*
- ❑ One of the following chassis and the *SCXI Chassis User Manual*:
  SCXI-1000
  SCXI-1000DC
  SCXI-1001
- ❑ One of the following cables:
  RS-232 (Type 5) null modem cable
  RS-485 (4-wire) cable and ferrite
- ❑ Your computer with an RS-232 or RS-485 port

- ❑ One of the following software packages and documentation:
  LabVIEW for Windows
  LabWindows/CVI for Windows
  NI-DAQ for PC compatibles

Software Programming Choices

There are several options to choose from when programming your National Instruments plug-in DAQ and SCXI hardware. You can use LabVIEW, LabWindows/CVI, or NI-DAQ.

LabVIEW and LabWindows/CVI Application Software

LabVIEW and LabWindows/CVI are innovative program development software packages for data acquisition and control applications. LabVIEW uses graphical programming, whereas LabWindows/CVI enhances traditional programming languages. Both packages include extensive libraries for data acquisition, instrument control, data analysis, and graphical data presentation.

LabVIEW features interactive graphics, a state-of-the-art user interface, and a powerful graphical programming language. The LabVIEW Data Acquisition VI Library, a series of VIs for using LabVIEW with National Instruments boards, is included with LabVIEW. The LabVIEW Data Acquisition VI Library is functionally equivalent to the NI-DAQ software.

LabWindows/CVI features interactive graphics and a state-of-the-art user interface and uses the ANSI standard C programming language. The LabWindows/CVI Data Acquisition Library, a series of functions for using LabWindows/CVI with National Instruments boards, is included with your NI-DAQ software kit. The LabWindows/CVI Data Acquisition Library is functionally equivalent to the NI-DAQ software.

Using LabVIEW or LabWindows/CVI software will greatly reduce the development time for your data acquisition and control application.

NI-DAQ Driver Software

The NI-DAQ driver software is included at no charge with all National Instruments DAQ hardware. NI-DAQ has an extensive library of functions that you can call from your application programming environment. These functions include routines for analog input

(A/D conversion), buffered data acquisition (high-speed A/D conversion), analog output (D/A conversion), waveform generation, digital I/O, counter/timer operations, SCXI, RTSI, self-calibration, messaging, and acquiring data to extended memory.

NI-DAQ also internally addresses many of the complex issues between the computer and the plug-in board, such as programming interrupts and DMA controllers. NI-DAQ maintains a consistent software interface among its different versions so that you can change platforms with minimal modifications to your code. Whether you are using conventional programming languages, LabVIEW, or LabWindows/CVI, your application uses the NI-DAQ driver software, as illustrated in Figure 1-1.

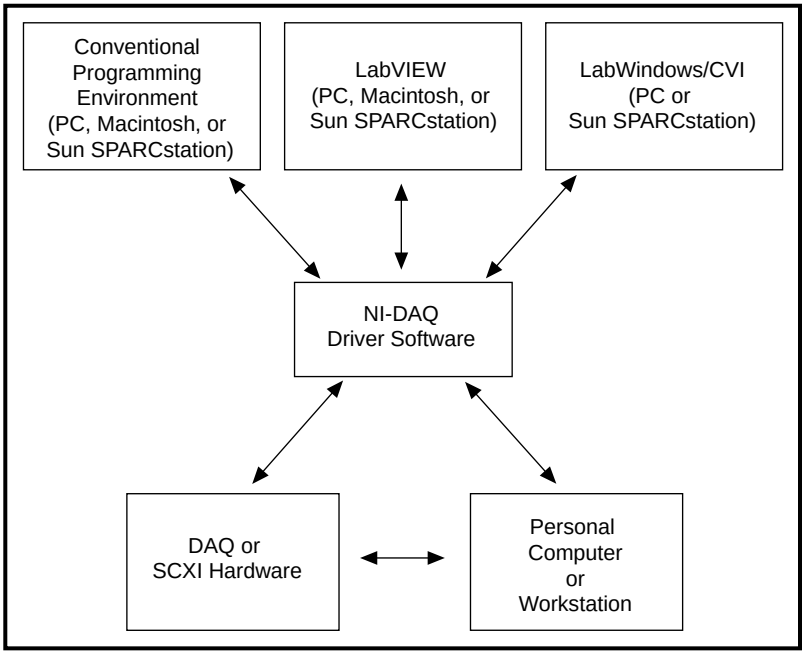

Figure 1-1. The Relationship between the Programming Environment, NI-DAQ, and Your Hardware

Optional Equipment

Listed below is an optional accessory that works with your device. New accessories are always being added to our product family. See your National Instruments catalog or call the National Instruments office nearest you for more information about optional equipment.

- IEEE 1284 7 in. type-C-to-type-A parallel port cable
- DAQ device or SCXI DAQ module (SCXI-1200)

Unpacking

Your SCXI-2400 module is shipped in an antistatic package to prevent electrostatic damage to the module. Electrostatic discharge can damage several components on the module. To avoid such damage in handling the module, take the following precautions.

- Ground yourself via a grounding strap or by holding a grounded object.
- Touch the antistatic package to a metal part of your SCXI chassis before removing the module from the package.
- Remove the module from the package and inspect the module for loose components or any other sign of damage. Notify National Instruments if the module appears damaged in any way. *Do not* install a damaged module into your SCXI chassis.
- *Never* touch the exposed pins of connectors.

Configuration and Installation

Chapter 2

This chapter describes how to configure the SCXI-2400 switches and how to install the SCXI-2400 into the SCXI chassis.

Module Configuration

Module configuration involves selecting an HDLC (high-level data link control) address for RS-485 and a baud rate.

HDLC Address Selection

Unless you are using multiple chassis and need to configure one or more serial ports for a different HDLC address, you can leave your SCXI-2400 with the factory-default HDLC address of 1.

If you are controlling your chassis via the RS-485 serial port on the SCXI-2400 (you cannot use RS-232 to control more than one chassis from a single serial port), you must specify the HDLC address of the SCXI-2400 on the serial port. You must configure all the serial ports on the same network for different addresses. Before setting the HDLC address of the SCXI-2400, set the address of your chassis to 0. The SCXI-100*X* have the factory-default chassis address setting of 0. See your chassis user manual for instructions on setting its address.

Set the HDLC address of the serial port with switches 1 through 8 on the front panel of the SCXI-2400 to select an HDLC address from 1 to 254 (addresses 0 and 255 are reserved). Figure 2-1 shows some examples of HDLC address settings.

If you are controlling your chassis via the RS-232 port on the SCXI-2400, make sure you note the HDLC address because it must match the address in your software configuration.

Baud Rate Selection

You must specify the baud rate (the signal rate over the serial port, expressed in bits per second). If you have multiple chassis cabled to the same RS-485 network, you must configure all the chassis on the same

network for the same baud rate. Set the baud rate with switches 9 through 12 on the front panel of the SCXI-2400. Use Table 2-1 to determine the appropriate settings for your baud rate.

If you want to disable the SCXI-2400 without removing it from the chassis, set the four baud rate switches to the disabled setting shown in Table 2-1. The SCXI-2400 will not control the chassis but you can still use the chassis as a direct cable connection between a plug-in DAQ device and one of the SCXI modules. The address switch settings do not matter when the SCXI-2400 is disabled; however, the chassis address may, so refer to your *SCXI Chassis User Manual*. Figure 2-1 shows some examples of baud rates and settings.

Table 2-1. SCXI-2400 Baud Rate Settings

Baud Rate	Switch 12	Switch 11	Switch 10	Switch 9
300 bps	Off	Off	Off	Off
600 bps	Off	Off	Off	On
1200 bps	Off	Off	On	Off
2400 bps	Off	Off	On	On
4800 bps	Off	On	Off	Off
9600 bps	Off	On	Off	On
19.2 kbps	Off	On	On	Off
38.4 kbps	Off	On	On	On
57.6 kbps	On	Off	Off	Off
Reserved	On	Off	Off	On
Reserved	On	Off	On	Off
Reserved	On	Off	On	On
Reserved	On	On	Off	Off
Reserved	On	On	Off	On
Reserved	On	On	On	Off
Disabled	On	On	On	On

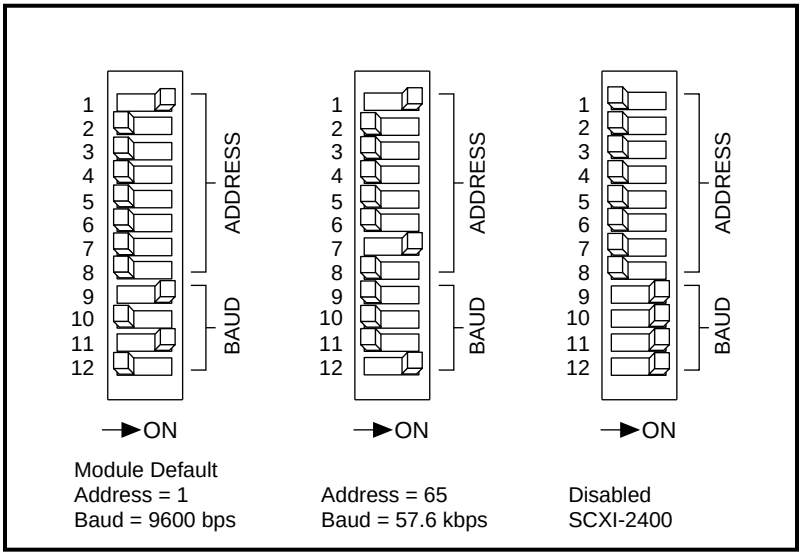

Figure 2-1. Baud Rate and Address Setting Examples

Hardware Installation

You can install the SCXI-2400 in any available SCXI chassis slot. After you have made any necessary changes and have verified and recorded the switch settings on the form in Appendix B, *Customer Communication*, you are ready to install the SCXI-2400. The following are general installation instructions; consult your *SCXI Chassis User Manual* for specific instructions and warnings.

1. Turn off the computer that contains the serial port or disconnect it from your SCXI chassis.
2. Turn off the SCXI chassis. Do not insert the SCXI-2400 into a chassis that is turned on or you may damage your module.
3. Insert the SCXI-2400 into the module guides. Gently guide the module into the back of the slot until the connectors make good contact. If the SCXI-2400 adapter board has been previously installed in the rear of the chassis, the module and adapter board must be firmly engaged; however, do not *force* the module into place.
4. Screw the front mounting panel of the SCXI-2400 to the top and bottom threaded strips of your SCXI chassis.

5. If you will be using an SCXI-1200 module or the RS-485 connections, install the SCXI-2400 adapter board by performing the following steps:
   a. Plug the 50-pin connector of the adapter board into the 50-pin connector at the rear of the SCXI-2400 module.
   b. Secure the adapter board by screwing the two screws through the rear panel of the adapter board and into the threaded strips in the rear of the SCXI chassis.
6. Install your cables. See the *Cable Installation* section of this chapter for more information.
7. Make sure you have installed and connected the module and cables properly. Fill out the *Hardware and Software Configuration Form* in Appendix B, *Customer Communication*.
8. Turn on the SCXI chassis.
9. Turn on the computer or reconnect it to your chassis.

The SCXI-2400 module is installed. You are now ready to install and configure your software.

If you are using NI-DAQ, LabVIEW, LabWindows/CVI, or ComponentWorks, refer to the installation instructions in your software documentation to install and configure your software.

Cable Installation

Parallel Port Cable

If you are using an SCXI-1200 DAQ module, install the SCXI-1200 in the slot adjacent to the SCXI-2400 and connect the 25-pin end of your parallel port cable to the parallel port connector on the DAQ module. Then connect the 36-pin end of your parallel port cable to the parallel port connector on the back of the SCXI-2400 adapter board.

Serial Port Cable

You can use the RS-232 port on your computer to control one chassis up to 100 ft (or 2,500 pF of cable capacitance) from your computer. If your chassis is farther away or you are using multiple chassis, you must use RS-485.

RS-232 Cable

Use only an RS-232 or an RS-485 cable; you cannot use both at the same time.

The RS-232 connector is the same as the 9-pin DSUB connector found on most computers. Some computers use a 25-pin connector and NEC computers use a 14-pin connector.

☞ **Note:** ***You must use a null modem cable to connect your computer directly to your SCXI-2400.***

If you must make your own cable, use Table 2-2 for the RS-232 connector pinout to determine the pin connections to on your computer.

Table 2-2. RS-232 Signal Connections

SCXI-2400 Connections		Serial Port Pin Connections			
Pin Number	Signal Name	Signal Name	Pin Number		
			9-Pin	25-Pin	14-Pin
1	No connect	—	—	—	—
2	RXD	TXD	3	2	9
3	TXD	RXD	2	3	1
4	DTR	DSR	6	6	2
5	GND	GND	5	7	13, 14
6	No connect	—	—	—	—
7	RTS	CTS	8	5	4
8	No connect	—	—	—	—
9	No connect	—	—	—	—

The DTR and RTS lines are always driven active by the SCXI-2400. Some computer serial ports may be disabled if their DSR and CTS lines are not active, so you should connect these signals. The SCXI-2400 ignores the control lines from the computer serial port, so it is not necessary to connect them, although connecting them will not adversely affect the system.

RS-485 Cable

Use only an RS-232 or an RS-485 cable; you cannot use both at the same time.

The RS-485 connector on the SCXI-2400 adapter board uses a screw terminal plug to accept wires from your RS-485 cable. Use twisted pair cable to increase noise tolerance. Make the network connections as given in Table 2-3.

Table 2-3. RS-485 Signal Connections

Computer RS-485 Port Signal	SCXI-2400 Signal
TX+	RX+
TX-	RX-
RX+	TX+
RX-	TX-

In addition, terminate the differential pairs by adding termination resistors at the ends of the cable. Terminate the cables with resistors that are the same value as the impedance of the cable. For most twisted pair cables, 120 Ω is sufficient. On the pair of wires that is cabled to the TX+ and TX- pins of the computer, install a resistor between the RX+ and RX- pins on the last SCXI-2400 in the chain. On the pair of wires that is cabled to the RX+ and RX- pins of the computer, install a resistor between the TX+ and TX- pins on the last SCXI-2400 in the chain and install a resistor between RX+ and RX- on the computer's serial port. Figure 2-2 shows a diagram of a two-chassis network.

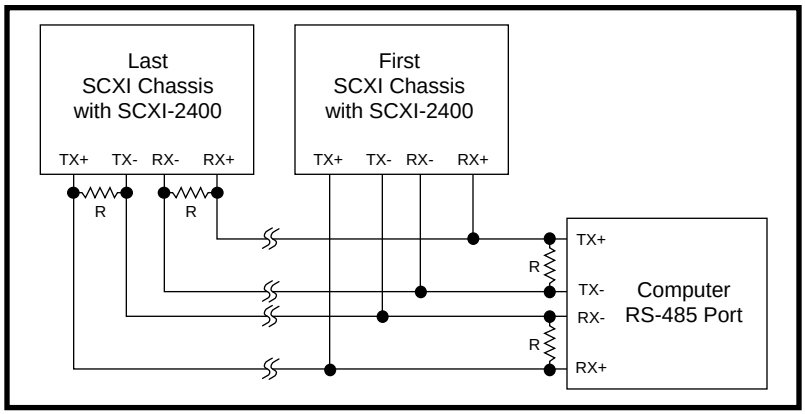

Figure 2-2. RS-485 Connections for Two Chassis with SCXI-2400 Modules

Clamp the ferrite around the RS-485 cable as close to the screw terminal plug as possible. Secure the ferrite with electrical tape, if necessary, to keep the ferrite from sliding down the cable. Government emissions regulations require that you use the ferrite.

Indicator Lights

The SCXI-2000 has five lights that indicate the state of the SCXI-2400 in operation. Table 2-4 lists these indicator lights and their functions.

Table 2-4. Front Panel LED Indicators

LED	Name	Function
TX	Transmit	Flashes when the SCXI-2400 is speaking to the host computer
RX	Receive	Flashes when the host computer is speaking
ONLINE	Online	Flashes slowly while waiting for synchronization with the host computer, then lights (and stops flashing) when the chassis is ready for normal operation
PROG	Program	Lights when the SCXI-2400 firmware requires reprogramming
TEST	Test	Lights when the chassis powers up or is reset. Turns off after all self-testing and self-initialization are complete

Listed below are the possible indications given by these LEDs:

- When you first turn on your chassis, both the power LED (on the chassis) and the **TEST** LED should light.
- If the SCXI-2400 needs to be reprogrammed, the **TEST** LED will turn off and the **PROG** LED will light and remain lit until the firmware on the SCXI-2400 is reinstalled. Consult your software manual for the procedure for firmware upgrades.
- If the power-on test finds something wrong with the SCXI-2400, the **ONLINE**, **PROG**, and **TEST** LEDs will all flash on and off.
- While the SCXI-2400 is waiting for synchronization with the NI-DAQ driver on the host computer, the **ONLINE** LED flashes slowly. The LED lights (and stops flashing) when the SCXI-2400 and the host computer are synchronized.
- If your switch settings are invalid, only the **PROG** and **TEST** LEDs will flash on and off together.
- If the chassis is ready for operation and the SCXI-2400 is disabled, the **PROG**, **TEST**, and **ONLINE** LEDs will flash in sequence.

- When the SCXI-2400 is ready for normal operation and set for serial port control, only the **ONLINE** LED will flash.
- When the SCXI-2400 receives an initialization instruction from the serial port, the **ONLINE** LED will remain lit.

Table 2-5 lists potential problems noted by your LEDs and possible solutions:

Table 2-5. SCXI-2400 Troubleshooting

Problem	Solution
Power LED on chassis does not light	Make sure the chassis is plugged in. Make sure the power switch is on. Make sure the chassis voltage selection is correct. Check the fuse in the power entry module. Return the chassis for servicing.
Power LED lights but **TEST** does not	Check the chassis backplane fuses. Return the chassis or SCXI-2400 for servicing.
PROG lights	Upgrade the firmware on your SCXI-2400. Refer to the NI-DAQ Configuration Utility for more details.
TEST and **PROG** flash simultaneously	Check the switch settings.
TEST, **PROG**, *and* **ONLINE** flash simultaneously	Return the SCXI-2400 for servicing.

Table 2-5. SCXI-2400 Troubleshooting (Continued)

Problem	Solution
ONLINE keeps flashing even after you have started your DAQ application	Check that the **RX** LED flashes when you use your host serial port. If not, then check the cable and your serial port configuration on the computer. If the **RX** LED flashes but **TX** does not, make sure that the address switches and baud rate switches match the configuration in the NI-DAQ Configuration Utility for the SCXI-2400. Check the cable for bad connections. If you are using a long cable, use a slower baud rate on the system. If you are using RS-485, make sure the serial port is configured to communicate using 4-wire mode.
TEST, **PROG**, and **ONLINE** flash in sequence but nothing works	Check your cables. If you want the SCXI-2400 disabled, check your chassis address settings and your configuration in the NI-DAQ Configuration Utility. If you want to use the SCXI-2400, check the switch setting.

Appendix A

Specifications

This appendix lists the specifications for the SCXI-2400. These specifications are typical at 25° C unless otherwise noted.

Connectors

RS-232 connector .....9-pin male DSUB, AT pinout

Max cable length .....2,500 pF capacitance (100 ft typ)

RS-485 connector or adapter board....4-pin screw terminal, labeled on panel

Max cable length .....4,000 ft

Parallel port connector.....36-pin IEEE-1284 type C

Digital I/O

Isolation

RS-485 port ..... 42 V

Common-mode transient suppression

RS-485 port ..... 750 V

Transfer Characteristics

Serial port

Baud rates supported..... 300, 600, 1200, 2400, 4800, and 9600 bps, 19.2 kbps, 38.4 kbps, 57.6 kbps

Byte format..... 1 start bit, 1 stop bit, no parity, 8 data bits

Maximum data transfer rates are for a single chassis operating continuously with an SCXI-1200. For short duration acquisitions, the chassis can buffer data at the maximum specified rates of the SCXI-1200.

Table A-1. Max Data Transfer Rates (S/s)

Baud Rate	Operating System	
	Windows 95	Windows 3.1
57.6 kbps	1,500	1,500
38.4 kbps	1,000	1,000
19.2 kbps	500	500
9600 bps	250	250
4800 bps	125	125
2400 bps	60	60
1200 bps	30	30
600 bps	15	15
300 bps	7	7

Physical

Dimensions ..... 3.0 by 17.2 by 20.3 cm
(1.2 by 6.8 by 8.0 in.)

Environment

Operating temperature..... 0° to 50° C
Storage temperature..... -55° to 150° C
Relative humidity..... 5% to 90% noncondensing

Customer Communication

Appendix B

For your convenience, this appendix contains forms to help you gather the information necessary to help us solve your technical problems and a form you can use to comment on the product documentation. When you contact us, we need the information on the Technical Support Form and the configuration form, if your manual contains one, about your system configuration to answer your questions as quickly as possible.

National Instruments has technical assistance through electronic, fax, and telephone systems to quickly provide the information you need. Our electronic services include a bulletin board service, an FTP site, a FaxBack system, and e-mail support. If you have a hardware or software problem, first try the electronic support systems. If the information available on these systems does not answer your questions, we offer fax and telephone support through our technical support centers, which are staffed by applications engineers.

Electronic Services

Bulletin Board Support

National Instruments has BBS and FTP sites dedicated for 24-hour support with a collection of files and documents to answer most common customer questions. From these sites, you can also download the latest instrument drivers, updates, and example programs. For recorded instructions on how to use the bulletin board and FTP services and for BBS automated information, call (512) 795-6990. You can access these services at:

United States: (512) 794-5422 or (800) 327-3077
Up to 14,400 baud, 8 data bits, 1 stop bit, no parity

United Kingdom: 01635 551422
Up to 9,600 baud, 8 data bits, 1 stop bit, no parity

France: 1 48 65 15 59
Up to 9,600 baud, 8 data bits, 1 stop bit, no parity

FTP Support

To access our FTP site, log on to our Internet host, `ftp.natinst.com`, as anonymous and use your Internet address, such as `joesmith@anywhere.com`, as your password. The support files and documents are located in the `/support` directories.

FaxBack Support

FaxBack is a 24-hour information retrieval system containing a library of documents on a wide range of technical information. You can access FaxBack from a touch-tone telephone at (512) 418-1111.

E-Mail Support (currently U.S. only)

You can submit technical support questions to the appropriate applications engineering team through e-mail at the Internet addresses listed below. Remember to include your name, address, and phone number so we can contact you with solutions and suggestions.

GPIB: `gpib.support@natinst.com`
DAQ: `daq.support@natinst.com`
VXI: `vxi.support@natinst.com`
LabWindows: `lw.support@natinst.com`
LabVIEW: `lv.support@natinst.com`
HiQ: `hiq.support@natinst.com`
VISA: `visa.support@natinst.com`
Lookout: `lookout.support@natinst.com`

Fax and Telephone Support

National Instruments has branch offices all over the world. Use the list below to find the technical support number for your country. If there is no National Instruments office in your country, contact the source from which you purchased your software to obtain support.

	Telephone	Fax
Australia	03 9 879 9422	03 9 879 9179
Austria	0662 45 79 90 0	0662 45 79 90 19
Belgium	02 757 00 20	02 757 03 11
Canada (Ontario)	519 622 9310	
Canada (Quebec)	514 694 8521	514 694 4399
Denmark	45 76 26 00	45 76 26 02
Finland	90 527 2321	90 502 2930
France	1 48 14 24 24	1 48 14 24 14
Germany	089 741 31 30	089 714 60 35
Hong Kong	2645 3186	2686 8505
Italy	02 413091	02 41309215
Japan	03 5472 2970	03 5472 2977
Korea	02 596 7456	02 596 7455
Mexico	95 800 010 0793	5 520 3282
Netherlands	0348 433466	0348 430673
Norway	32 84 84 00	32 84 86 00
Singapore	2265886	2265887
Spain	91 640 0085	91 640 0533
Sweden	08 730 49 70	08 730 43 70
Switzerland	056 200 51 51	056 200 51 55
Taiwan	02 377 1200	02 737 4644
U.K.	01635 523545	01635 523154

Technical Support Form

Photocopy this form and update it each time you make changes to your software or hardware, and use the completed copy of this form as a reference for your current configuration. Completing this form accurately before contacting National Instruments for technical support helps our applications engineers answer your questions more efficiently.

If you are using any National Instruments hardware or software products related to this problem, include the configuration forms from their user manuals. Include additional pages if necessary.

Name _____

Company _____

Address _____

_____

Fax (___)_____ Phone (___) _____

Computer brand _____ Model _____ Processor _____

Operating system (include version number) _____

Clock speed _____MHz RAM _____MB Display adapter _____

Mouse ___yes ___no Other adapters installed _____

Hard disk capacity _____MB Brand _____

Instruments used _____

_____

National Instruments hardware product model _____ Revision _____

Configuration _____

National Instruments software product _____ Version _____

Configuration _____

The problem is: _____

_____

_____

_____

_____

List any error messages: _____

_____

_____

The following steps reproduce the problem:_____

_____

_____

_____

_____

_____

SCXI-2400 Hardware and Software Configuration Form

Record the settings and revisions of your hardware and software on the line to the right of each item. Complete a new copy of this form each time you revise your software or hardware configuration, and use this form as a reference for your current configuration. Completing this form accurately before contacting National Instruments for technical support helps our applications engineers answer your questions more efficiently.

National Instruments Products

ComponentWorks, LabVIEW, LabWindows/CVI, or NI-DAQ version_____

Baud rate switches (on or off): 12___ 11___ 10___ 9___ Baud___

Address switches
(on or off): 8___ 7___ 6___ 5___ 4___ 3___ 2___ 1___ Address___

HDLC addresses and baud rates of other chassis _____

Chassis _____

Other modules and slots_____

Other Products

Computer make and model _____

Microprocessor _____

Clock frequency or speed _____

Type of video board installed _____

Operating system _____

Operating system version _____

Programming language _____

Programming language version _____

Other boards in system _____

Base I/O address of other boards _____

DMA channels of other boards _____

Interrupt level of other boards _____

RS-232 or RS-485 _____

Plug-in serial port interface card (make and model)_____

Comm port number _____

Base address of comm port _____

Comm port interrupt level _____

Documentation Comment Form

National Instruments encourages you to comment on the documentation supplied with our products. This information helps us provide quality products to meet your needs.

Title: *SCXI™-2400 User Manual*

Edition Date: June 1996

Part Number: 321231A-01

Please comment on the completeness, clarity, and organization of the manual.

_____

_____

_____

_____

_____

_____

_____

If you find errors in the manual, please record the page numbers and describe the errors.

_____

_____

_____

_____

_____

_____

_____

Thank you for your help.

Name _____

Title _____

Company _____

Address _____

_____

Phone ( ) _____

Mail to: Technical Publications
National Instruments Corporation
6504 Bridge Point Parkway
Austin, TX 78730-5039

Fax to: Technical Publications
National Instruments Corporation
(512) 794-5678

Glossary

Prefix	Meaning	Value
m-	milli-	10^{-3}
k-	kilo-	10^{3}
M-	mega-	10^{6}

Ω	ohms
%	percent
A	amperes
AC	alternating current
A/D	analog-to-digital
baud rate	expressed in bits per second, is the signal rate over the serial port
bps	bits per second; used to express baud rate
C	Celsius
CTS	clear to send signal
D/A	digital-to-analog
DAQ	data acquisition
DC	direct current
DSR	data set ready signal
DSUB	D-subminiature connector
DTR	data terminal ready signal

EISA	Extended Industry Standard Architecture
F	farads
ft	feet
GND	ground
HDLC	high-level data link control
hex	hexadecimal
Hz	hertz
in.	inches
I/O	input/output
ISA	Industry Standard Architecture
LED	light-emitting diode
MB	megabytes of memory
NC	not connected (signal)
ONLINE	online LED
PROG	program LED
RTS	request to send signal
RX	receive LED
RXD	receive data signal
TEST	testing LED
TX	transmit LED
TXD	transmit data signal
s	seconds
SCXI	Signal Conditioning eXtensions for Instrumentation
TTL	transistor-transistor logic

V	volts
VI	virtual instrument

Index

B

baud rate selection, 2-1 to 2-3
- disabling SCXI-2400 without removing from chassis, 2-2
- settings for baud rate (table), 2-1 to 2-3
- switch settings (figure), 2-3

C

cables, 2-4 to 2-7
- parallel port cable, 2-4
- RS-232 cable, 2-5
- RS-485 cable, 2-6 to 2-7
- specifications, A-1

configuration. See also hardware installation.
- baud rate selection, 2-1 to 2-3
  - settings for baud rate (table), 2-1 to 2-3
  - switch settings (figure), 2-3
- HDLC address selection, 2-1

customer communication, *x-xi*, B-1 to B-2

D

digital I/O specifications, A-1

documentation
- conventions used in manual, *viii*
- National Instruments documentation, *ix*
- organization of manual, *vii*

E

electronic technical support, B-1 to B-2

environment specifications, A-2

equipment, optional, 1-4

F

fax and telephone support, B-2

H

hardware installation, 2-3 to 2-9
- cables, 2-4 to 2-7
  - parallel port cable, 2-4
  - RS-232 cable, 2-5
  - RS-485 cable, 2-6 to 2-7
- indicator lights and troubleshooting, 2-7 to 2-9
- procedure for, 2-3 to 2-4
- unpacking the SCXI-2400, 1-4

hardware requirements for getting started, 1-1 to 1-2

HDLC address selection, 2-1

I

indicator lights
- front panel LED indicators (table), 2-7
- function of indicators, 2-7 to 2-8
- problems indicated by (table), 2-8 to 2-9

installation. *See* hardware installation.

L

LabVIEW and LabWindows/CVI application software, 1-2

LEDs. *See* indicator lights.

M

manual. *See* documentation.

N

NI-DAQ driver software, 1-3

O

ONLINE indicator
    function of, 2-7, 2-8
    troubleshooting (table), 2-9

P

parallel port cable, 2-4
physical specifications, A-2
PROG indicator
    function of, 2-7 to 2-8
    troubleshooting (table), 2-8 to 2-9

R

RS-232 cable
    installation, 2-5
    signal connections (table), 2-5
RS-485 cable
    connections for two chassis (figure), 2-6
    installation, 2-6
    signal connections (table), 2-6
RX indicator (table), 2-7

S

SCXI-2400
    disabling without removing from chassis, 2-2
    optional equipment, 1-4
    overview, 1-1
    requirements for getting started, 1-1 to 1-2
    serial port cables, 2-4
        RS-232, 2-5
        RS-485, 2-6
    software programming choices, 1-2 to 1-3
signal connections
    RS-232 cable (table), 2-5
    RS-485 cable (table), 2-6
software programming choices, 1-2 to 1-3
    LabVIEW and LabWindows/CVI application software, 1-2
    NI-DAQ driver software, 1-3
specifications, A-1 to A-2
    connectors, A-1
    digital I/O, A-1
    environment, A-2
    physical, A-2
    transfer characteristics, A-1

T

technical support, B-1 to B-2
TEST indicator
    function of, 2-7 to 2-8
    troubleshooting, 2-8
transfer characteristics, A-1
troubleshooting with LED indicators (table), 2-8 to 2-9
TX indicator (table), 2-7