NI 5431 Video Generator Instrument Driver Quick Reference Guide

Easy Programming for National Instruments Oscilloscopes

ICON	FUNCTION NAME AND DESCRIPTION†	TYPE	PARAMETER	DESCRIPTION
Video Data Formatting Functions				
Vgen Format	**VDG_SetVideoFormat** Selects the video format used for the calculation of the video data	Enum I32	Video format Number of lines	Selects the video format to be generated Returns the number of lines per frame for the selected video format
Vgen SetImg	**VDG_SetImage** Maps the basic image used for the calculation of the video data or unmaps the image after the calculation is performed	Image handle Enum	Image Function	Specifies the image reference for the image to be processed Maps or unmaps the image to be processed
Vgen Attrib.	**VDG_Attribute** Gets or sets any attribute for the selected video format	Boolean Enum DBL DBL	Get/Set (Get) Attribute Set value Get value	Selects whether you want to get or set an attribute Selects which attribute to get or set Attribute value to be set Returns the actual attribute value
Vgen Filter	**VDG_SetFilter** Selects and applies a specific filter to a specified video component	SGL [ ] Enum Enum	Custom filter data Video component Filter type	Inputs the filter coefficients for a custom defined filter to be applied on a specified component Selects the video component to be filtered Selects the filter type used on the specified component
Get 16-Bit Output Data Functions				
Vgen Lin-I16	**VDG_Get_I16_Line** Calculates the data of the selected video component for the specified video line	I32 Enum I16 [ ]	Line number Signal type Output signal	Specifies the number of the video line to be calculated Specifies the video component to be calculated Returns the calculated component I16 data for the specified line
Vgen Y/C-I16	**VDG_Get_YC_I16_Line** Calculates the data for the Y (Luma) and C (Chroma) components for the specified video line	I32 I16 [ ] I16 [ ]	Line number Y signal C signal	Specifies the number of the video line to be calculated Returns the calculated I16 composite luma (Sync + Luma) data for the specified line Returns the calculated I16 chroma data for the specified line
Vgen Blck-I16	**VDG_Get_I16_LineBlock** Controls the generation of the composite video data in block mode	Enum I32 Boolean I16 [ ]	Function Line number Digital Sync Output signal	Selects the function to perform Specifies the number of the video line to be calculated Enables or disables the insertion of the 4 digital synchronization signals into the 4 lowest significant bits of the 16-bit video data Returns the calculated composite I16 data for the specified line

National Instruments™ is a trademark of National Instruments Corporation. Product and company names mentioned herein are trademarks or trade names of their respective companies.

 © Copyright 2000 National Instruments Corp. All rights reserved.

ICON	FUNCTION NAME AND DESCRIPTION†	TYPE	PARAMETER	DESCRIPTION
Get 16-Bit Output Data Functions (continued)				
	VDG_Get_RGB_I16_Line Calculates the data for the R, G, and B components for the specified video line	I32	Line number	Specifies the number of the video line to be calculated
		Enum	Synchro channel	Specifies which channel includes the composite synchronization signal
		I16 [ ]	Red signal	Returns the calculated red I16 data for the specified line
		I16 [ ]	Green signal	Returns the calculated green I16 data for the specified line
		I16 [ ]	Blue signal	Returns the calculated blue I16 data for the specified line
Get SGL Precision Output Data Functions				
	VDG_GetSignalLine Calculates the data of the selected video component for the specified video line	I32	Line number	Specifies the number of the video line to be calculated
		Enum	Signal type	Specifies the video component to be calculated
		SGL [ ]	Output signal	Returns the calculated component SGL data for the specified line
	VDG_Get_YC_Line Calculates the data for the Y (Luma) and C (Chroma) components for the specified video line	I32	Line number	Specifies the number of the video line to be calculated
		SGL [ ]	Y signal	Returns the calculated single precision (SGL) composite luma (Sync + Luma) data for the specified line
		SGL [ ]	C signal	Returns the calculated single precision (SGL) chroma data for the specified line
Set Insertion Test Lines Functions				
	VDG_SetLineData Inserts an input array with luma data into the active part of a specific video line. The input data can be either 8-bit unsigned (U8), 16-bit signed (I16), or single precision (SGL) values	I32	Line number	Specifies the video line where the test signal data is to be inserted
		U8 [ ]	U8 Data	Inputs the insertion test signal data to the video line defined by the Line number control
		U16 [ ]	U16 Data	Inputs the insertion test signal data to the video line defined by the Line number control
		SGL [ ]	SGL Data	Inputs the insertion test signal data to the video line defined by the Line number control
	VDG_SetRGB48LineData Inserts an RGB test signal into the active part of a specified video line	I32	Line number	Specifies the video line where the test signal data is to be inserted
		U16 [ ]	Red	Inputs the insertion test signal data for the red channel to the video line defined by the Line number control
		U16 [ ]	Green	Inputs the insertion test signal data for the green channel to the video line defined by the Line number control
		U16 [ ]	Blue	Inputs the insertion test signal data for the blue channel to the video line defined by the Line number control
	VDG_SetYUV48LineData Inserts a YUV or YQI (depending on the selected video format test signal into the active part of a specified video line	I32	Line number	Specifies the video line where the test signal data is to be inserted
		U16 [ ]	Y	Inputs the insertion test signal data for the luma component (Y) to the video line defined by the Line number control
		I16 [ ]	U or Q	Inputs the insertion test signal data for the first chroma component (U for PAL, I for NTSC, or Db for SECAM) to the video line defined by the Line number control
		I16 [ ]	V or I	Inputs the insertion test signal data for the second chroma component (V for PAL, Q for NTSC, or Dr for SECAM) to the video line defined by the Line number control
		Boolean	Kill Chroma Modulation	In SECAM mode, disables (kills) the frequency modulation sub-carrier that otherwise would be present on a test line even though the U (Db) and V (Dr) components are null
	VDG_MergeDigitalSync Merges the 4 synchronization bits (Hsync, Vsync, Csync, and FieldID) into the 4 LBSes of a 16-bit input array	I32	Line number	Specifies the video line where the digital synchronization information is to be merged
		I16 [ ]	Input signal	16-bit (I16) data array containing the line data where the synchronization signals are to be merged
		I16 [ ]	Output signal	16-bit (I16) data array including the 4 synchronization bits

ICON	FUNCTION NAME AND DESCRIPTION†	TYPE	PARAMETER	DESCRIPTION
High Level Save/Load ITS Functions				
	Download insertion test signal Downloads Insertion Test Signal (ITS) data from a file	File path	Test lines path	File path for the ITS data file to be loaded
		I32	Line number	Specifies the video line where the ITS signal is to be inserted
		String	Comments	Shows comments about the saved ITS signal; if no comments have been saved, this indicator will be empty
		I32 [ ]	Y or R	Contains the data for the first ITS component. If the ITS format is YUV, the data represents the Y (luma) signal. If the ITS format is RGB, the data represents the R (red) signal
		I32 [ ]	U, Q or G	Contains the data for the second ITS component. If the ITS format is YUV, the data represents the U (PAL), Db (SECAM) or Q (NTSC) signal. If the ITS format is RGB, the data represents the G (green) signal
		I32 [ ]	V, I or B	Contains the data for the third ITS component. If the ITS format is YUV, the data represents the V (PAL, Dr (SECAM) or I (NTSC) signal. If the ITS format is RGB, the data represents the B (blue) signal
		boolean	ITS format	Returns the ITS format (either YUV or RGB) for the loaded test line
	Save RGB insertion test signal Saves the 3 arrays (U16) that correspond to an RGB insertion test signal	File path	Test lines path	File path for the ITS signal to be saved
		U16 [ ]	R input	Inputs the 16-bit (U16) data for the red channel of the ITS signal to be saved
		U16 [ ]	G input	Inputs the 16-bit (U16) data for the green channel of the ITS signal to be saved
		U16 [ ]	B input	Inputs the 16-bit (U16) data for the blue channel of the ITS signal to be saved
		String	Comments	Text comments up to 256 characters can be input in this control. The text will be saved in the same file as the ITS data and can be retrieved using a VI such as the download insertion test signal.vi
	Save YUV insertion test signal Saves the 3 arrays in order (U16, I16, and I16) that correspond to a YUV or YQI insertion test signal	File path	Test lines path	File path for the ITS signal to be saved
		U16 [ ]	Y input	This array inputs the 16 bit (U16) data for the luma channel of the ITS signal to be saved
		I16 [ ]	U (or Q)	Inputs the 16 bit (I16) data for the U (PAL), Q (NTSC) or Db (SECAM) component of the ITS signal to be saved
		I16 [ ]	V (or I)	Inputs the 16 bit (I16) data for the V (PAL), I (NTSC), or Dr (SECAM) component of the ITS signal to be saved
		String	Comments	Text comments up to 256 characters can be input in this control. The text will be saved in the same file as the ITS data and can be retrieved using a VI such as the download insertion test signal.vi
		Boolean	Kill Chroma Modulation	In SECAM mode, disables (kills) the frequency modulation sub-carrier that otherwise would be present on a test line even though the U (Db) and V (Dr) components are null
NI 5431 High-Level Driver Functions				
	NI-5431 HL Calculate and Download Video Data Calculates the video data of a specified video format and downloads it to the NI 5431 board	File refnum	instrument handle in	The VISession handle that you obtain from niFgen_init or niFgen_InitWithOptions. The handle identifies a particular instrument session
		Enum	Video type	Selects the video format to be generated
		File refnum	instrument handle out	The VISession handle that you obtain from niFgen_init or niFgen_InitWithOptions. The handle identifies a particular instrument session
		I32	sequence length	Number of waveforms used to create the entire video signal
		I32 [ ]	waveform handles array	Array of waveform handles specifying the playlist needed to generate a video signal

NI 5431 High-Level Driver Functions (continued)

ICON	FUNCTION NAME AND DESCRIPTION†	TYPE	PARAMETER	DESCRIPTION
	NI-5431 HL Calculate and Save S-Video Data Calculates the S-Video data and saves it to the specified files	File path	Output C binary video file	File path for the Output C binary video file to be saved
		File path	Output Y binary video file	File path for the Output Y binary video file to be saved
		Enum	Video type	Selects the video format to be generated
		Boolean	Digital sync	Enables or disables the insertion of the 4 digital synchronization signals into the 4 lowest significant bits of the 16-bit video data
	NI-5431 HL Calculate and Save Video Data Calculates the composite video data and saves it to thespecified files	Boolean	Digital sync	Enables or disables the insertion of the 4 digital synchronization signals into the 4 lowest significant bits of the 16-bit video data
		File path	Output binary video file path	File path for the Output binary video file to be saved
		Enum	Video type	Selects the video format to be generated
	NI-5431 HL Configure Sequencer Configures the generation sequence of the video waveform	File refnum	instrument handle in	The VISession handle that you obtain from niFgen_init or niFgen_InitWithOptions. The handle identifies a particular instrument session
		I32	sequence length	Number of waveforms used to create the entire video signal
		I32 [ ]	waveform handles array	Array of waveform handles specifying the playlist needed to generate a video signal
		DBL	Output level (mV/IRE)	Output level of the video signal (default: 7 mV/IRE)
		DBL	offset	Controls the dc level of the video signal
		File refnum	instrument handle out	The VISession handle that you obtain from the niFgen_init or niFgen_InitWithOptions function. The handle identifies a particular instrument session
	NI-5431 HL Download Video Data from File Downloads the video data from a file	File path	path	Location of the file to be downloaded
		File refnum	instrument handle in	The VISession handle that you obtain from the niFgen_init or niFgen_InitWithOptions function. The handle identifies a particular instrument session
		I32	Number of blocks	Specify the number of blocks used to build the sequence
		File refnum	instrument handle out	The VISession handle that you obtain from the niFgen_init or niFgen_InitWithOptions function. The handle identifies a particular instrument session
		I32	sequence length	Number of waveforms used to create the entire video signal
		I32 [ ]	waveform handle	Array of waveform handles specifying the playlist needed to generate a video signal
	NI-5431 HL Initialize Initializes the NI 5431 board	I16	Device ID	Device number assigned to the NI 5431 during configuration
		File refnum	instrument handle out	The VISession handle that you obtain from the niFgen_init or niFgen_InitWithOptions function. The handle identifies a particular instrument session
	NI-5431 HL Setup Attributes Sets up the hardware attributes needed to generate a video waveform	Boolean	DigiSync	Enables the digital output data of the NI 5431
		File refnum	instrument handle in	The VISession handle that you obtain from the niFgen_init or niFgen_InitWithOptions function. The handle identifies a particular instrument session
		DBL	Output level (mV/IRE)	Output level of the video signal (default: 7 mV/IRE)
		Cluster	Filter Settings	Enables the analog and digital filters of the NI 5431
		Enum	Video type	Selects the video format to be generated
		Cluster	Trigger Control	Controls the generation trigger
		File refnum	instrument handle out	The VISession handle that you obtain from the niFgen_init or niFgen_InitWithOptions function. The handle identifies a particular instrument session

ICON	FUNCTION NAME AND DESCRIPTION†	TYPE	PARAMETER	DESCRIPTION
NI-FGEN Instrument Driver Functions				
	niFgen_InitiateGeneration Initiates signal generation	Session	instrumentHandle	Identifies a particular instrument session
	niFgen_close Closes the instrument I/O session, destroys the instrument driver session and all of its attributes, and deallocates any memory resources the driver uses	Session	instrumentHandle	Identifies a particular instrument session
	niFgen_ErrorHandler Converts a status code returned by an instrument driver function into a user-readable string and returns any error elaborations	Session	instrumentHandle	Identifies a particular instrument session
		Status	errorCode	Passes the Status parameter that is returned from any of the instrument driver functions
		Char[256]	errorMessage	Returns the user-readable message string that corresponds to the status code you specify
IMAQ Vision Toolkit Functions				
	IMAQ_Create Creates an image	I32	Border size	Determines the width, in pixels, of the border to create around an image
		String	Image Name	The name associated with the created image. Each image created must have a unique name
		Enum	Image Type	Specifies the image type
		cluster	New Image	The Image structure that is supplied as input to all subsequent (downstream) functions used by IMAQ Vision. Multiple images can be created in a LabVIEW or BridgeVIEW application
	IMAQ_Dispose Destroys an image and frees the space it occupied in memory. This VI is required for each image created in an application to free the memory allocated to IMAQ_Create	Boolean	All Images (No)	Specifies whether to destroy a single image or all previously created images. Giving a TRUE value on input destroys all images previously created. The default is FALSE
		Cluster	Image	Specifies the image to destroy
	IMAQ_ReadFile Reads an image file	Path	File Path	The complete pathname, including drive, directory, and filename, for the file to be loaded
		Cluster	Image	The reference to the image structure to which the data from the image file is applied
		Boolean	Load Color Palette (No)	Determines whether to load the color table present in the file (if it exists). If loaded, this table is read and made available to the output Color Palette. The default is FALSE
		Cluster	File Options	A cluster of user-optional values that you can use to read non-standard file formats. The file structure must be known to the user.
		Cluster	Color Palette Out	Contains the RGB color table (if the file has one) read from the file when the user passes the value TRUE for the input Load Color Palette? (No)
		Cluster	Image Out	The reference to the image structure containing the data read from the image file
		String	File Type Out	Indicates the file type that is read. This string returns an identifier of the file format, which can be BMP, TIFF, JPEG, PNG, or AIPD (internal file format). File Type returns xxx if the file format is unknown
		I32	File Data Type Out	Indicates the pixel size defined in the header for standard image file types. File Options are not necessary for reading standard image files. For other types of image files, the returned values are passed from File Options/File Data Type
	IMAQ_WriteFile Writes an image to a file	Cluster	Color Palette	Used to apply colors to a monochrome image
		Cluster	Image	The reference to the image structure to be written to an image file
		Enum	File Type	Describes the file type to be written. The default file type is BMP. Other file types supported are AIPD, TIFF, JPEG, and PNG
		Path	File Path	Is the complete pathname, including drive, directory, and filename, of the file to be written. This path can be supplied by either the user or the VI File Dialog from LabVIEW or BridgeVIEW

ICON	FUNCTION NAME AND DESCRIPTION†	TYPE	PARAMETER	DESCRIPTION
IMAQ Vision Toolkit Functions (continued)				
	IMAQ_ImagetoArray Extracts (copies) the pixels from an image, or part of an image, into a LabVIEW or BridgeVIEW 2D array	Cluster	Image	The reference to the source (input) image
		I32 [ ]	Optional Rectangle	Defines a four-element array that contains the coordinates (Left/Top/Right/Bottom) of the region to extract. The operation applies to the entire image if the input is empty or not connected
		U8 [ ]	Image Pixels (U8)	Returns the extracted pixel values into a 2D array. This output is used only for an 8-bit image
		I16 [ ]	Image Pixels (I16)	Returns the extracted pixel values into a 2D array. This output is used only for a 16-bit image
		SGL	Image Pixels (Float)	Returns the extracted pixel values into a 2D array. This output is used only for a 32-bit floating-point image
	IMAQ_ArraytoImage Creates an image from a 2D array	Cluster	Image	The reference to the source (input) image
		U8 [ ]	Image Pixels (U8)	Returns the extracted pixel values into a 2D array. This output is used only for an 8-bit image
		I16 [ ]	Image Pixels (I16)	Returns the extracted pixel values into a 2D array. This output is used only for a 16-bit image
		SGL	Image Pixels (Float)	Returns the extracted pixel values into a 2D array. This output is used only for a 32-bit floating-point image
		Cluster	Image Out	The reference to the destination (output) image
	IMAQ_Winddraw Displays an image in an image window	I32	Window Number (0…15)	Specifies the image window in which the image is displayed
		Cluster	Image	Specifies the image reference for the displayed image
		String	Title	An image window name. When a string is attached to this input, the image window automatically takes that name
		Cluster	Color Palette	Is used to apply a color palette to an image window
		Boolean	Resize to Image Size? (Y)	Specifies whether the user wants to resize the image window automatically to fit the image size. The default is TRUE (yes), in which case the user does not have to know the size of a source image before displaying it

Programming Flow

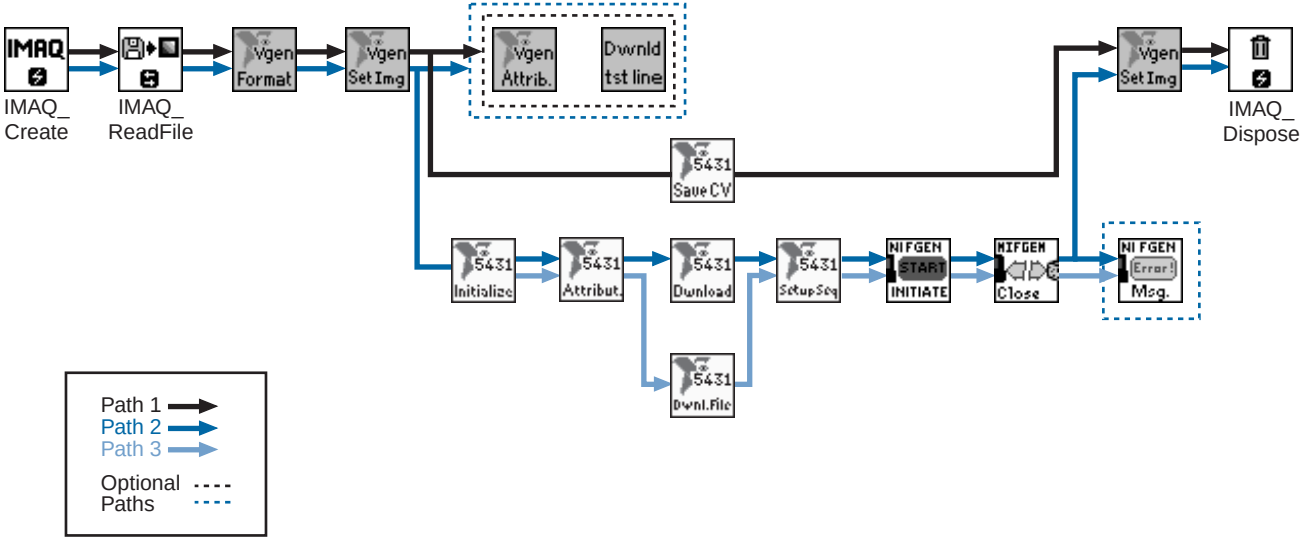

322598A-01 Jan00