SC-2075 Signal Conditioning Accessory

The SC-2075 is a desktop signal conditioner that you can connect directly to National Instruments E Series or 1200 Series devices. The SC-2075 has the following features:

- Binding posts
  - Three for ±15 V outputs
  - Two for 0 to 5 V outputs
  - Two for measuring analog signals or DC voltages
- BNC connectors
  - Two for analog inputs
  - Two for analog outputs
  - One for triggering
- Spring terminals
  - Eleven for analog inputs
  - Seven for analog controls
  - Seven for counter controls
  - Two for TTL-level power and ground signals
  - Eight for digital input/output (DIO) signals

What You Need to Get Started

To set up and use your SC-2075, you need the following items:

- SC-2075 signal conditioner
- *SC-2075 Signal Conditioning Accessory User Guide*
- 68-pin E Series device and 68-pin cable
  or 50-pin 1200 Series device and 50-pin ribbon cable
- BNC cables
- Banana plug cables
- Wire no larger than 24 AWG
- Wire strippers

National Instruments™ and ni.com™ are trademarks of National Instruments Corporation. Product and company names mentioned herein are trademarks or trade names of their respective companies.

 © Copyright 2000 National Instruments Corp. All rights reserved.

Installing Your SC-2075

To connect your SC-2075 signal conditioner to an E Series or 1200 Series device, connect one end of the cable to your device and the other end to the SC-2075 signal conditioner. Figure 1 shows a typical SC-2075 setup using an E Series device.

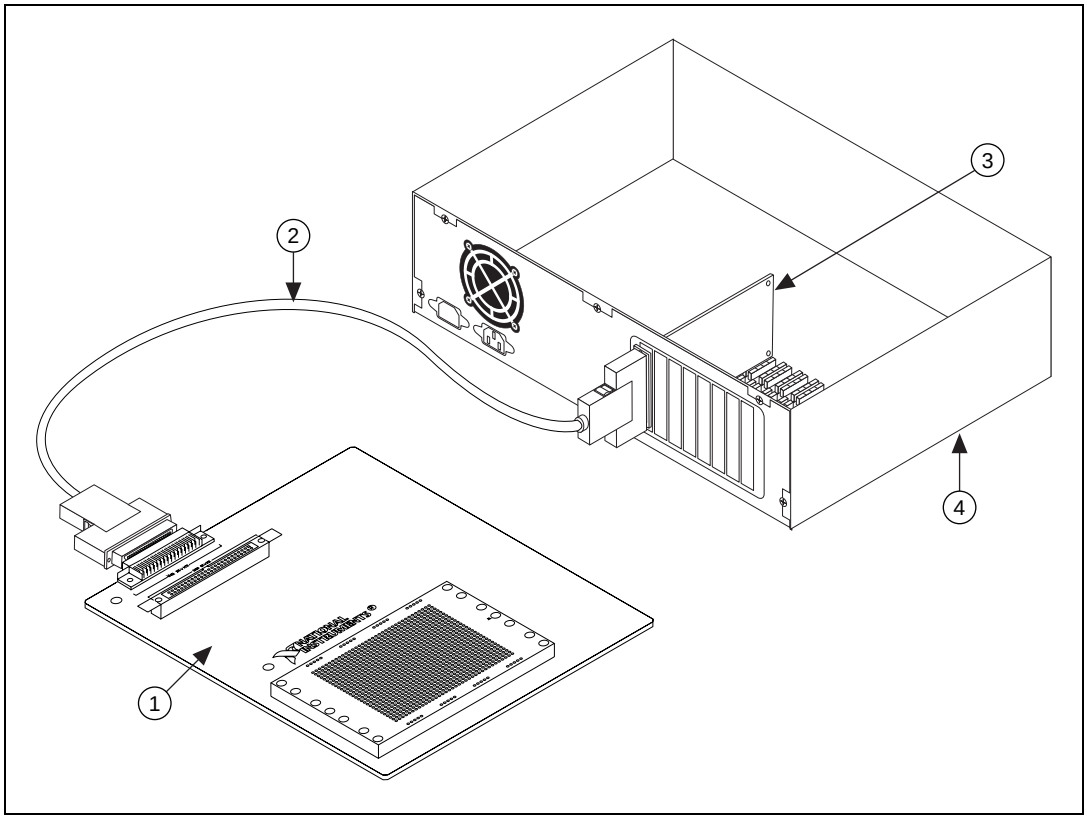

1	SC-2075, for Orientation Reference Only	2	SH6868 Cable	4	Computer
		3	E Series Device		

Figure 1. Typical SC-2075 Setup with an E Series Device

Figure 2 shows the location of all SC-2075 connections.

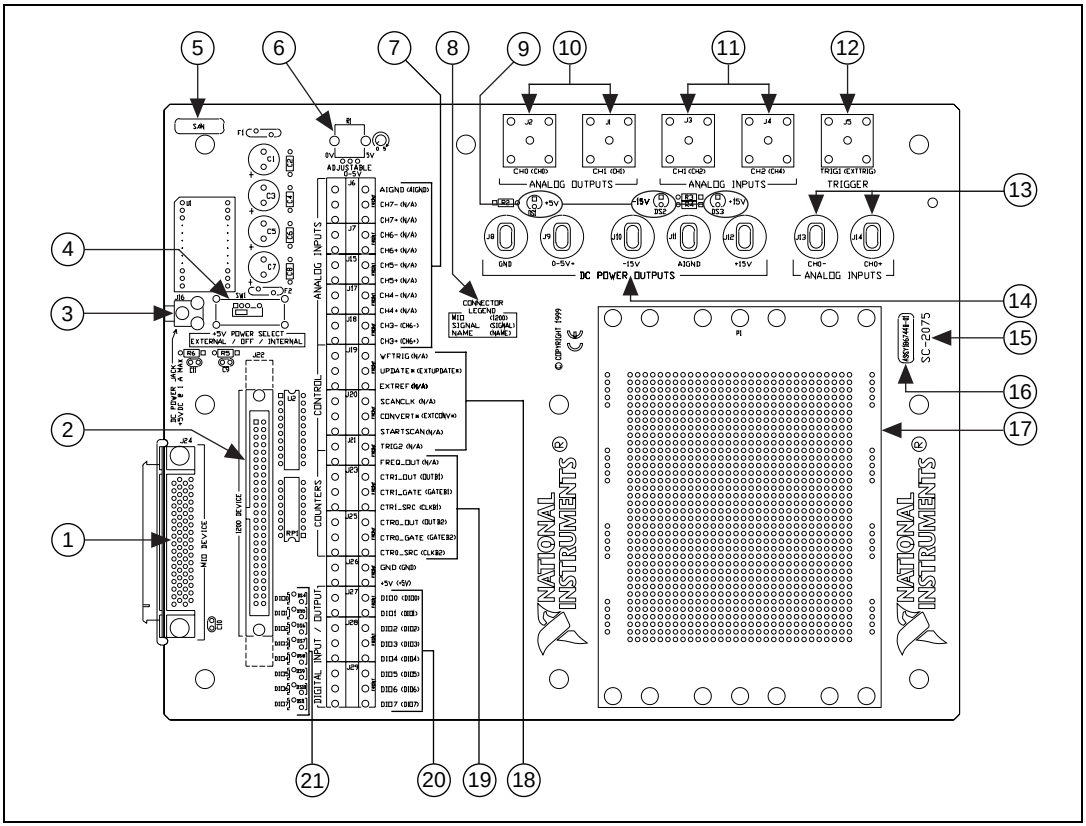

1	E Series Connector	8	Legend	15	Product Name
2	1200 Series Connector	9	Power LED Status Indicators	16	Assembly Number
3	DC Power Jack	10	Analog Output BNCs	17	Prototyping Breadboard Area
4	+5 V Power Select Switch SW1	11	Analog Input BNCs	18	Control Spring Terminals
5	Serial Number	12	Trigger BNC	19	Counter Spring Terminals
6	0–5 V Potentiometer	13	Analog Input Banana Plugs	20	DIO Spring Terminals
7	Analog Input Spring Terminals	14	DC Power Output Banana Plugs	21	DIO LED Status Indicators

Figure 2. SC-2075 Connection Location Diagram

The three power indicator LEDs should be lit when switch SW1 is in the *External* or *Internal* position. When SW1 is in the *External* position, a +5 VDC external power source supplies power to the DC Power Jack. When SW1 is in the *Internal* position, the E Series or 1200 Series device supplies the power. When SW1 is in the *Off* position, all power is off and all LEDs should be off. Table 1 shows the power source, switch position, and LED status of possible SC-2075 power configurations. If any of the LEDs are not lit in a configuration in which they should be lit, verify that

the powered device cable is properly connected. Figure 3 shows a diagram of the SC-2075 power switch.

Table 1. SC-2075 Power Configurations

SW1 Switch Position	Power Source	LED Status
Off	None	Off
Internal	Device	On
External	DC Power Jack J16[1]	On

[1] When using an external power source make sure the power cord is attached and plugged into a power outlet.

Figure 3. SC-2075 Switch SW1 Diagram

Analog Input

You can use the SC-2075 to measure either of the following analog inputs:

- Up to eight differential analog input channels when used with an E Series device
- Up to four differential analog input channels when used with a 1200 Series device

Note You must configure your E Series or 1200 Series device for *differential* analog input mode before making connections to the SC-2075.

Each connector on the SC-2075 has a channel name label corresponding to both an E Series device and a 1200 Series device. The channel name in bold text corresponds to an E Series device channel and the italicized text corresponds to a 1200 Series device channel. For example, the BNC connector labeled **CH1***(CH2)* means that this BNC connector connects to CH1 of the E Series device or CH2 of the 1200 Series device.

Analog Output

The SC-2075 allows access to two analog outputs through BNC connectors of the E Series and 1200 Series devices. The analog output BNC connectors labeled **CH0***(CH0)* and **CH1***(CH1)* connect to DAC0 and DAC1, respectively, on your device.

DC-Power Output

The SC-2075 contains binding post connection for both 0 to +5 V and ±15 V power supplies. The 0 to +5 V output is a variable output controlled by a 100 kΩ linear potentiometer. The ±15 V supply is generated onboard the SC-2075 and is sourced by a +5 V supply.

The 0 to +5 V supply is taken from the +5 V supply that powers the SC-2075. You can source this +5 V supply from either the E Series or 1200 Series device or from a user-supplied external source. A switch on the SC-2075 selects the source of the +5 V supply. Set the switch to Internal to select the E Series or 1200 Series +5 V supply. Set the switch to External to select the user-supplied +5 V supply through the DC power jack on the SC-2075. The 0 to +5 V outputs are accessible at the two binding posts labeled 0-5V+ and GND.

The SC-2075 contains a DC-DC converter that creates a ±15 V supply. The ±15 V supply voltage is accessible at the three binding posts labeled +15V, AIGND, and –15V. AIGND is the ground-reference signal for the ±15 V supply.

The SC-2075 contains one 1.1 A, self-resetting fuse that resets after the SC-2075 is powered off by setting the power switch on the SC-2075 to the Off position for 15 seconds.

Digital I/O

The SC-2075 contains spring terminal access to the DIO channels of the E Series or 1200 Series device. Eight LEDs correlating to the eight DIO lines indicate the state of each digital channel. If the LED is lit, the channel is either pulled high (high > 2.6 V) or driven high. If the LED is off, the channel is either pulled low (low < 0.4 V) or driven low.

A ground is available at the spring terminal labeled GND and is the reference for the DIO lines.

Timing and Control I/O

The SC-2075 contains spring terminal access to the timing I/O signals of an E Series or 1200 Series device.

Each connector on the SC-2075 has a channel name label corresponding to both an E Series device and a 1200 Series device. The channel name in bold plain text corresponds to an E Series device channel and the italicized text corresponds to a 1200 Series device channel. For example, the spring terminal connector labeled **CONVERT*** *(EXTCONV*)* indicates that this terminal connects to PFI2/CONVERT* of the E Series device or EXTCONV* of the 1200 Series device.

Specifications

This section lists the SC-2075 specifications and are typical at 25 °C unless otherwise specified.

Analog Input

Number of channels

E Series ..... 8 differential

1200 Series..... 4 differential

Connector types and signals

SC-2075 Connector/Signal Name	E Series Signal Name	1200 Series Signal Name
Binding Posts / **CH0+***(CH0+)*	ACH0	ACH0
Binding Posts / **CH0–***(CH0–)*	ACH8	ACH1
BNC / **CH1***(CH2)*	ACH1/9	ACH2/3
BNC / **CH2***(CH4)*	ACH2/10	ACH4/5
BNC / **TRIG1***(EXTTRIG)*	PFI0/TRIG1	TRIG1/EXTTRIG
Spring Terminals / **CH3+***(CH6+)*	ACH3	ACH6
Spring Terminals / **CH3–***(CH6–)*	ACH11	ACH7
Spring Terminals / **CH4+***(N/A)*	ACH4	N/A
Spring Terminals / **CH4–***(N/A)*	ACH12	N/A
Spring Terminals / **CH5+***(N/A)*	ACH5	N/A
Spring Terminals / **CH5–***(N/A)*	ACH13	N/A
Spring Terminals / **CH6+***(N/A)*	ACH6	N/A
Spring Terminals / **CH6–***(N/A)*	ACH14	N/A
Spring Terminals / **CH7+***(N/A)*	ACH7	N/A
Spring Terminals / **CH7–***(N/A)*	ACH15	N/A

Analog Output

Connector types and signals

SC-2075 Connector/Signal Name	E Series Signal Name	1200 Series Signal Name
BNC / **CH0***(CH0)*	DAC0	DACOUT0
BNC / **CH1***(CH1)*	DAC1	DACOUT1

Digital I/O

Note Use wire no larger than 24 AWG.

Connector types and signals

SC-2075 Connector/Signal Name	E Series Signal Name	1200 Series Signal Name
Spring Terminal / **DIO0***(DIO0)*	DIO0	PA0
Spring Terminal / **DIO1***(DIO1)*	DIO1	PA1
Spring Terminal / **DIO2***(DIO2)*	DIO2	PA2
Spring Terminal / **DIO3***(DIO3)*	DIO3	PA3
Spring Terminal / **DIO4***(DIO4)*	DIO4	PA4
Spring Terminal / **DIO5***(DIO5)*	DIO5	PA5
Spring Terminal / **DIO6***(DIO6)*	DIO6	PA6
Spring Terminal / **DIO7***(DIO7)*	DIO7	PA7

LED state indicators .....8, one per DIO line

Timing and Control I/O

Connector types and signals

SC-2075 Connector/Signal Name	E Series Signal Name	1200 Series Signal Name
Spring Terminal / **CTR0_SRC***(CLKB2)*	PFI8/GPCTR0_SRC	CLKB2
Spring Terminal / **CTR0_GATE***(GATEB2)*	PFI9/GPCTR0_GATE	GATEB2
Spring Terminal / **CTR0_OUT***(OUTB2)*	GPCTR0_OUT	OUTB2
Spring Terminal / **CTR1_SRC***(CLKB1)*	PFI3/GPCTR1_SRC	CLKB1
Spring Terminal / **CTR1_GATE***(GATEB1)*	PFI4/GPCTR1_GATE	GATEB1
Spring Terminal / **CTR1_OUT***(OUTB1)*	GPCTR1_OUT	OUTB1
Spring Terminal / **FREQ_OUT***(N/A)*	FREQ_OUT	N/A
Spring Terminal / **TRIG1***(EXTTRIG)*	PFI0/TRIG1	EXTTRIG
Spring Terminal / **TRIG2***(N/A)*	PFI1/TRIG2	N/A
Spring Terminal / **STARTSCAN***(N/A)*	PFI7/STARTSCAN	N/A
Spring Terminal / **CONVERT****(EXTCONV**)*	PFI2/CONVERT*	EXTCONV*
Spring Terminal / **SCANCLK***(N/A)*	SCANCLK	N/A
Spring Terminal / **EXTREF***(N/A)*	EXTREF	N/A
Spring Terminal / **UPDATE****(EXTUPDATE**)*	PFI5/UPDATE*	EXTUPDATE*
Spring Terminal / **WFTRIG***(N/A)*	PFI6/WFTRING	N/A

Power Supplies

+5 VDC input selection ..... SP3T switch (EXTERNAL/OFF/INTERNAL)

Efficiency of DC-DC converter ..... 60% at full load

0 to +5 V variable output ..... Adjustable using 100 kΩ linear potentiometer

External supply
Condor model WP05050I

Input ..... 100–240 VAC, 50–60 Hz, 0.2 A

Output ..... +5 VDC, 1 A

Power Requirements

+5 VDC (±5%) .....1.0 A

Power available.....+4.65 VDC to
+5.25 VDC at 1 A

Physical

External input connector.....DC power jack

Dimensions ..... 26.72 by 20.70 by 4.37 cm
(10.52 by 8.15 by 1.72 in.)

I/O connectors.....68-pos male SCSI-II type
50-pos male ribbon cable type

BNC connectors.....5

Binding posts 7

Spring terminals.....35

322617A-01 Jan00