SCXI™

SCXI-1125 User Manual

October 2009
372425C-01

NATIONAL INSTRUMENTS™

Worldwide Technical Support and Product Information

ni.com

National Instruments Corporate Headquarters

11500 North Mopac Expressway Austin, Texas 78759-3504 USA Tel: 512 683 0100

Worldwide Offices

Australia 1800 300 800, Austria 43 662 457990-0, Belgium 32 (0) 2 757 0020, Brazil 55 11 3262 3599, Canada 800 433 3488, China 86 21 5050 9800, Czech Republic 420 224 235 774, Denmark 45 45 76 26 00, Finland 358 (0) 9 725 72511, France 01 57 66 24 24, Germany 49 89 7413130, India 91 80 41190000, Israel 972 3 6393737, Italy 39 02 41309277, Japan 0120-527196, Korea 82 02 3451 3400, Lebanon 961 (0) 1 33 28 28, Malaysia 1800 887710, Mexico 01 800 010 0793, Netherlands 31 (0) 348 433 466, New Zealand 0800 553 322, Norway 47 (0) 66 90 76 60, Poland 48 22 328 90 10, Portugal 351 210 311 210, Russia 7 495 783 6851, Singapore 1800 226 5886, Slovenia 386 3 425 42 00, South Africa 27 0 11 805 8197, Spain 34 91 640 0085, Sweden 46 (0) 8 587 895 00, Switzerland 41 56 2005151, Taiwan 886 02 2377 2222, Thailand 662 278 6777, Turkey 90 212 279 3031, United Kingdom 44 (0) 1635 523545

For further support information, refer to the *Technical Support Information* document. To comment on National Instruments documentation, refer to the National Instruments Web site at ni.com/info and enter the info code feedback.

© 1999–2009 National Instruments Corporation. All rights reserved.

Important Information

Warranty

The SCXI-1125 is warranted against defects in materials and workmanship for a period of one year from the date of shipment, as evidenced by receipts or other documentation. National Instruments will, at its option, repair or replace equipment that proves to be defective during the warranty period. This warranty includes parts and labor.

The media on which you receive National Instruments software are warranted not to fail to execute programming instructions, due to defects in materials and workmanship, for a period of 90 days from date of shipment, as evidenced by receipts or other documentation. National Instruments will, at its option, repair or replace software media that do not execute programming instructions if National Instruments receives notice of such defects during the warranty period. National Instruments does not warrant that the operation of the software shall be uninterrupted or error free.

A Return Material Authorization (RMA) number must be obtained from the factory and clearly marked on the outside of the package before any equipment will be accepted for warranty work. National Instruments will pay the shipping costs of returning to the owner parts which are covered by warranty.

National Instruments believes that the information in this document is accurate. The document has been carefully reviewed for technical accuracy. In the event that technical or typographical errors exist, National Instruments reserves the right to make changes to subsequent editions of this document without prior notice to holders of this edition. The reader should consult National Instruments if errors are suspected. In no event shall National Instruments be liable for any damages arising out of or related to this document or the information contained in it.

EXCEPT AS SPECIFIED HEREIN, NATIONAL INSTRUMENTS MAKES NO WARRANTIES, EXPRESS OR IMPLIED, AND SPECIFICALLY DISCLAIMS ANY WARRANTY OF MERCHANTABILITY OR FITNESS FOR A PARTICULAR PURPOSE. CUSTOMER'S RIGHT TO RECOVER DAMAGES CAUSED BY FAULT OR NEGLIGENCE ON THE PART OF NATIONAL INSTRUMENTS SHALL BE LIMITED TO THE AMOUNT THERETOFORE PAID BY THE CUSTOMER. NATIONAL INSTRUMENTS WILL NOT BE LIABLE FOR DAMAGES RESULTING FROM LOSS OF DATA, PROFITS, USE OF PRODUCTS, OR INCIDENTAL OR CONSEQUENTIAL DAMAGES, EVEN IF ADVISED OF THE POSSIBILITY THEREOF. This limitation of the liability of National Instruments will apply regardless of the form of action, whether in contract or tort, including negligence. Any action against National Instruments must be brought within one year after the cause of action accrues. National Instruments shall not be liable for any delay in performance due to causes beyond its reasonable control. The warranty provided herein does not cover damages, defects, malfunctions, or service failures caused by owner's failure to follow the National Instruments installation, operation, or maintenance instructions; owner's modification of the product; owner's abuse, misuse, or negligent acts; and power failure or surges, fire, flood, accident, actions of third parties, or other events outside reasonable control.

Copyright

Under the copyright laws, this publication may not be reproduced or transmitted in any form, electronic or mechanical, including photocopying, recording, storing in an information retrieval system, or translating, in whole or in part, without the prior written consent of National Instruments Corporation.

National Instruments respects the intellectual property of others, and we ask our users to do the same. NI software is protected by copyright and other intellectual property laws. Where NI software may be used to reproduce software or other materials belonging to others, you may use NI software only to reproduce materials that you may reproduce in accordance with the terms of any applicable license or other legal restriction.

Trademarks

CVI, National Instruments, NI, ni.com, and LabVIEW are trademarks of National Instruments Corporation. Refer to the *Terms of Use* section on `ni.com/legal` for more information about National Instruments trademarks.

The mark LabWindows is used under a license from Microsoft Corporation. Windows is a registered trademark of Microsoft Corporation in the United States and other countries. Other product and company names mentioned herein are trademarks or trade names of their respective companies.

Members of the National Instruments Alliance Partner Program are business entities independent from National Instruments and have no agency, partnership, or joint-venture relationship with National Instruments.

Patents

For patents covering National Instruments products/technology, refer to the appropriate location: **Help»Patents** in your software, the `patents.txt` file on your media, or the *National Instruments Patent Notice* at `ni.com/patents`.

WARNING REGARDING USE OF NATIONAL INSTRUMENTS PRODUCTS

(1) NATIONAL INSTRUMENTS PRODUCTS ARE NOT DESIGNED WITH COMPONENTS AND TESTING FOR A LEVEL OF RELIABILITY SUITABLE FOR USE IN OR IN CONNECTION WITH SURGICAL IMPLANTS OR AS CRITICAL COMPONENTS IN ANY LIFE SUPPORT SYSTEMS WHOSE FAILURE TO PERFORM CAN REASONABLY BE EXPECTED TO CAUSE SIGNIFICANT INJURY TO A HUMAN.

(2) IN ANY APPLICATION, INCLUDING THE ABOVE, RELIABILITY OF OPERATION OF THE SOFTWARE PRODUCTS CAN BE IMPAIRED BY ADVERSE FACTORS, INCLUDING BUT NOT LIMITED TO FLUCTUATIONS IN ELECTRICAL POWER SUPPLY, COMPUTER HARDWARE MALFUNCTIONS, COMPUTER OPERATING SYSTEM SOFTWARE FITNESS, FITNESS OF COMPILERS AND DEVELOPMENT SOFTWARE USED TO DEVELOP AN APPLICATION, INSTALLATION ERRORS, SOFTWARE AND HARDWARE COMPATIBILITY PROBLEMS, MALFUNCTIONS OR FAILURES OF ELECTRONIC MONITORING OR CONTROL DEVICES, TRANSIENT FAILURES OF ELECTRONIC SYSTEMS (HARDWARE AND/OR SOFTWARE), UNANTICIPATED USES OR MISUSES, OR ERRORS ON THE PART OF THE USER OR APPLICATIONS DESIGNER (ADVERSE FACTORS SUCH AS THESE ARE HEREAFTER COLLECTIVELY TERMED "SYSTEM FAILURES"). ANY APPLICATION WHERE A SYSTEM FAILURE WOULD CREATE A RISK OF HARM TO PROPERTY OR PERSONS (INCLUDING THE RISK OF BODILY INJURY AND DEATH) SHOULD NOT BE RELIANT SOLELY UPON ONE FORM OF ELECTRONIC SYSTEM DUE TO THE RISK OF SYSTEM FAILURE. TO AVOID DAMAGE, INJURY, OR DEATH, THE USER OR APPLICATION DESIGNER MUST TAKE REASONABLY PRUDENT STEPS TO PROTECT AGAINST SYSTEM FAILURES, INCLUDING BUT NOT LIMITED TO BACK-UP OR SHUT DOWN MECHANISMS. BECAUSE EACH END-USER SYSTEM IS CUSTOMIZED AND DIFFERS FROM NATIONAL INSTRUMENTS' TESTING PLATFORMS AND BECAUSE A USER OR APPLICATION DESIGNER MAY USE NATIONAL INSTRUMENTS PRODUCTS IN COMBINATION WITH OTHER PRODUCTS IN A MANNER NOT EVALUATED OR CONTEMPLATED BY NATIONAL INSTRUMENTS, THE USER OR APPLICATION DESIGNER IS ULTIMATELY RESPONSIBLE FOR VERIFYING AND VALIDATING THE SUITABILITY OF NATIONAL INSTRUMENTS PRODUCTS WHENEVER NATIONAL INSTRUMENTS PRODUCTS ARE INCORPORATED IN A SYSTEM OR APPLICATION, INCLUDING, WITHOUT LIMITATION, THE APPROPRIATE DESIGN, PROCESS AND SAFETY LEVEL OF SUCH SYSTEM OR APPLICATION.

Conventions

The following conventions are used in this manual:

<> — Angle brackets that contain numbers separated by an ellipsis represent a range of values associated with a bit or signal name—for example, P0.<3..0>.

[ ] — Square brackets enclose optional items—for example, [`response`].

» — The » symbol leads you through nested menu items and dialog box options to a final action. The sequence **File»Page Setup»Options** directs you to pull down the **File** menu, select the **Page Setup** item, and select **Options** from the last dialog box.

— This icon denotes a note, which alerts you to important information.

— This icon denotes a caution, which advises you of precautions to take to avoid injury, data loss, or a system crash. When this symbol is marked on a product, refer to the *Read Me First: Safety and Electromagnetic Compatibility* for information about precautions to take.

— When symbol is marked on a product, it denotes a warning advising you to take precautions to avoid electrical shock.

— When symbol is marked on a product it, denotes a component that may be hot. Touching this component may result in bodily injury.

bold — Bold text denotes items that you must select or click in the software, such as menu items and dialog box options. Bold text also denotes parameter names.

italic — Italic text denotes variables, emphasis, a cross-reference, or an introduction to a key concept. Italic text also denotes text that is a placeholder for a word or value that you must supply.

`monospace` — Text in this font denotes text or characters that you should enter from the keyboard, sections of code, programming examples, and syntax examples. This font is also used for the proper names of disk drives, paths, directories, programs, subprograms, subroutines, device names, functions, operations, variables, filenames, and extensions.

`monospace italic` — Italic text in this font denotes text that is a placeholder for a word or value that you must supply.

Contents

Chapter 1
About the SCXI-1125

What You Need to Get Started 1-1
National Instruments Documentation 1-3
Installing Application Software, NI-DAQ, and the DAQ Device 1-4
Installing the SCXI-1125 Module into the SCXI Chassis 1-4
Connecting the SCXI-1125 in an SCXI Chassis to an E/M/X Series DAQ Device for Multiplexed Scanning 1-4
Connecting the SCXI-1125 in a PXI/SCXI Combination Chassis to an E/M/X Series DAQ Device for Multiplexed Scanning 1-5
Connecting the SCXI-1125 to an E/M/X Series DAQ Device for Parallel Scanning 1-5
Verifying the SCXI-1125 Installation in Software 1-6
Installing SCXI Using NI-DAQmx in Software 1-6
Manually Adding Modules in NI-DAQmx 1-6
Installing SCXI Using Traditional NI-DAQ (Legacy) in Software 1-6
Manually Adding Modules in Traditional NI-DAQ (Legacy) 1-6
Verifying and Self-Testing the Installation 1-6
Troubleshooting the Self-Test Verification 1-7
Troubleshooting in NI-DAQmx 1-7

Chapter 2
Connecting Signals

AC and DC Voltage Connections 2-1
Ground-Referenced Signal 2-2
Floating Signal 2-3
AC-Coupling 2-4
Pin Assignments 2-5
Temperature Sensor Connection 2-7
Rear Signal Connector 2-7

Chapter 3
Configuring and Testing

SCXI-1125 Software-Configurable Settings 3-1
Common Software-Configurable Settings 3-1
Filter Bandwidth 3-1
Gain/Input Range 3-1
Connecting the SCXI-1125 in an SCXI Chassis to an E/M/X Series DAQ Device for Multiplexed Scanning 3-2
Connecting the SCXI-1125 in a PXI/SCXI Combination Chassis to an E/M/X Series DAQ Device for Multiplexed Scanning 3-2
Configurable Settings in MAX 3-2
NI-DAQmx 3-3
Creating a Voltage Global Channel or Task 3-3
Traditional NI-DAQ (Legacy) 3-4
Configuring Module Property Pages in Traditional NI-DAQ (Legacy) 3-5
Creating a Virtual Channel 3-6
Verifying the Signal 3-6
Verifying the Signal in NI-DAQmx Using a Task or Global Channel 3-6
Verifying the Signal in Traditional NI-DAQ (Legacy) 3-7
Verifying the Signal Using Channel Strings 3-7
Verifying the Signal Using Virtual Channel 3-8

Chapter 4
Theory of Operation

Gain 4-1
Filter Bandwidth and Cutoff Frequency 4-2
Operating in Multiplexed Mode 4-2
Multiplexed Hardware Operation Theory 4-3
Operating in Parallel Mode 4-4
Theory of Parallel Hardware Operation 4-4

Chapter 5
Using the SCXI-1125

Temperature Measurements Using Thermocouples 5-1
Making High-Voltage Measurements 5-4
Developing Your Application in NI-DAQmx 5-5
Typical Program Flowchart 5-5

General Discussion of Typical Flowchart 5-7
Creating a Task Using DAQ Assistant or Programmatically 5-7
Adjusting Timing and Triggering 5-7
Configuring Channel Properties 5-8
Acquiring, Analyzing, and Presenting 5-9
Completing the Application 5-9
Developing an Application Using LabVIEW 5-9
Using a DAQmx Channel Property Node in LabVIEW 5-11
Specifying Channel Strings in NI-DAQmx 5-12
Text Based ADEs 5-14
Measurement Studio (Visual Basic, .NET, and C#) 5-14
Programmable NI-DAQmx Properties 5-14
Developing Your Application in Traditional NI-DAQ (Legacy) 5-15
Traditional NI-DAQ (Legacy) in LabVIEW 5-16
Typical Program Flow 5-17
Configure the SCXI-1125 Settings Using Traditional NI-DAQ (Legacy) in LabVIEW 5-18
Configure, Start Acquisition, and Take Readings Using Traditional NI-DAQ (Legacy) in LabVIEW 5-19
Convert Scaling Using Traditional NI-DAQ (Legacy) in LabVIEW 5-20
Analyze and Display Using Traditional NI-DAQ (Legacy) in LabVIEW 5-20
Traditional NI-DAQ (Legacy) in Text-Based ADEs 5-21
Configuring System Settings Using Traditional NI-DAQ (Legacy) C API 5-21
Configure Module Settings Using Traditional NI-DAQ (Legacy) C API 5-22
Perform Offset Null Compensation Using Traditional NI-DAQ (Legacy) C API 5-23
Perform Acquisition Using Traditional NI-DAQ (Legacy) C API 5-23
Perform Scaling, Analysis, and Display 5-24
Using Software for Multiplexed Scanning 5-24
LabVIEW and the SCXI Channel String 5-25
LabVIEW and the Virtual Channel String 5-26
Performing a Multiplexed Scan 5-27
C and Low-Level DAQ Functions 5-28
Using Software for Parallel Scanning 5-28
LabVIEW and Parallel Mode 5-28
C and Parallel Mode 5-29
Other Application Documentation and Material 5-29
Traditional NI-DAQ (Legacy) CVI Examples 5-29
Traditional NI-DAQ (Legacy) Measurement Studio Examples 5-29
Calibration 5-30
Calibration Procedures 5-30
One-Point Offset Calibration 5-31
Two-Point Gain and Offset Calibration 5-32

Appendix A
Specifications

Appendix B
Using SCXI Channel Strings with Traditional NI-DAQ (Legacy) 7.0 or Later

Appendix C
Removing the SCXI-1125

Appendix D
Common Questions

Glossary

Index

Figures

Figure 2-1. Connecting a Ground-Referenced Signal 2-2
Figure 2-2. Connecting a Floating Signal 2-3
Figure 2-3. Connecting a Floating AC-Coupled Signal 2-4
Figure 2-4. Connecting a Ground-Referenced AC-Coupled Signal 2-4

Figure 4-1. SCXI-1125 Block Diagram 4-1

Figure 5-1. Typical Program Flowchart 5-6
Figure 5-2. LabVIEW Channel Property Node with Lowpass Frequency Set at 10 kHz on Channel SC1Mod1/ai0 5-12
Figure 5-3. Typical SCXI-1125 Program Flow with Traditional NI-DAQ (Legacy) 5-17
Figure 5-4. Using the AI Parameter VI to Set Up the SCXI-1125 5-19

Figure A-1. SCXI-1125 Dimensions A-7

Figure C-1. Removing the SCXI-1125 ..... C-2

Tables

Table 2-1. Front Signal Pin Assignments 2-6
Table 2-2. Rear Signal Pin Assignments 2-8

Table 5-1. Extended Gain and Range Using the SCXI-1327 or SCXI-1313A 5-4
Table 5-2. Extended Gain and Range Using the TBX-1316 5-5
Table 5-3. NI-DAQmx Properties 5-8
Table 5-4. Programming a Task in LabVIEW 5-10
Table 5-5. NI-DAQmx Properties 5-15
Table 5-6. Settings for Configuring the SCXI-1125 Through the AI Parameter 5-18
Table 5-7. Configuration Functions 5-22
Table 5-8. NI-DAQ Functions Used to Configure SCXI-1125 5-23
Table 5-9. Gain Values and Input Limits 5-31

Table A-1. Input Signal Range Versus Gain A-1
Table A-2. Terminal Block Maximum Voltages A-8

Table D-1. Comparison of the SCXI-1125 with the SCXI-1120 ..... D-1
Table D-2. Digital Signals on the SCXI-1125 ..... D-3

1

About the SCXI-1125

This chapter introduces the SCXI-1125 module and explains how to install the software and hardware.

The SCXI-1125 is a jumperless eight-channel isolated analog input conditioning module with programmable gain and filter settings on each channel. Each channel has 12 programmable gain settings from 1 to 2000 and two programmable filter settings of either 4 Hz or 10 kHz. Each channel has an external circuit for grounding the inputs that you can use for offset calibration. An onboard EEPROM provides nonvolatile storage of software correction constants for both gain and offset.

The SCXI-1125 provides up to 300 V_{rms} *working isolation* per channel and has an input range of up to 1000 VDC when using an appropriate attenuator terminal block. The SCXI-1125 supports both multiplexed and parallel output modes and includes a *cold-junction compensation* (CJC) channel that you can scan in multiplexed mode.

What You Need to Get Started

To set up and use the SCXI-1125 module, you need the following:

- ❑ Hardware
  - – SCXI-1125 module
  - – One of the following terminal blocks:
    - • SCXI-1305
    - • SCXI-1313A
    - • SCXI-1320
    - • SCXI-1327
    - • SCXI-1328
    - • SCXI-1338
    - • TBX-1316
    - • TBX-1328
    - • TBX-1329

Note For maximum allowable voltage for a particular terminal block refer to Table A-2, *Terminal Block Maximum Voltages*.

- SCXI or PXI/SCXI combination chassis
- One of the following:
  - E/M/X Series multifunction DAQ device
  - SCXI-1600 module

Note You can also use the SCXI-1125 with an S Series simultaneous sampling DAQ device, but *only* in parallel mode.

- A computer if using an SCXI chassis
- Cabling, cable adapter, and sensors as required for your application

❑ Software
- NI-DAQmx 9.0 or later
- One of the following software packages:
  - LabVIEW
  - LabWindows™/CVI™
  - Measurement Studio

❑ Documentation
- *Read Me First: Safety and Electromagnetic Compatibility*
- *DAQ Getting Started* guides
- *SCXI Quick Start Guide*
- *SCXI-1125 User Manual*
- Documentation for your hardware
- Documentation for your software

National Instruments Documentation

The *SCXI-1125 User Manual* is one piece of the documentation set for data acquisition (DAQ) systems. You could have any of several types of manuals depending on the hardware and software in the system. Use the manuals you have as follows:

- SCXI chassis or PXI/SCXI combination chassis manual—Read this manual for maintenance information about the chassis and for installation instructions.
- *DAQ Getting Started* guides—These documents have information about installing NI-DAQ and the E/M/X Series DAQ device. Install NI-DAQ and the DAQ device before you install the SCXI module.
- The *SCXI Quick Start Guide*—This document contains a quick overview for setting up an SCXI chassis, installing SCXI modules and terminal blocks, and attaching sensors. It also describes setting up the SCXI system in MAX.
- The SCXI hardware user manuals—Read these manuals next for detailed information about signal connections and module configuration. They also explain, in greater detail, how the module works and contain application hints.
- Accessory installation guides or manuals—If you are using accessory products, read the terminal block and cable assembly installation guides. They explain how to physically connect the relevant pieces of the system. Consult these guides when you are making the connections.
- The E/M/X Series DAQ device documentation—This documentation has detailed information about the E/M/X Series DAQ device that plugs into or is connected to the computer. Use this documentation for hardware installation and configuration instructions, specification information about the E/M/X Series DAQ device, and application hints.
- Software documentation—You may have both application software and NI-DAQ software documentation. National Instruments (NI) application software includes LabVIEW, LabWindows/CVI, and Measurement Studio. After you set up the hardware system, use either your application software documentation or the NI-DAQ documentation to help you write your application. If you have a large, complex system, it is worthwhile to look through the software documentation before you configure the hardware.

- One or more of the following help files for software information:
  - **Start»All Programs»National Instruments»NI-DAQ» NI-DAQmx Help**
  - **Start»All Programs»National Instruments»NI-DAQ» Traditional NI-DAQ User Manual**
  - **Start»All Programs»National Instruments»NI-DAQ» Traditional NI-DAQ Function Reference Help**
- NI application notes or tutorials—NI has additional material about measurements available at `ni.com/support`.

You can download NI documents from `ni.com/manuals`. To download the latest version of NI-DAQ, click **Download Software»Drivers and Updates** at `ni.com`.

Installing Application Software, NI-DAQ, and the DAQ Device

Refer to the *DAQ Getting Started* guides packaged with the NI-DAQ software to install your application software, NI-DAQ driver software, and the DAQ device to which you will connect the SCXI-1125. NI-DAQmx 9.0 or later is required to configure and program the SCXI-1125 module. If you do not have NI-DAQmx 9.0 or later, you can either contact a NI sales representative to request it on a CD or download the latest NI-DAQ version from `ni.com`.

Note Refer to the *Read Me First: Safety and Electromagnetic Compatibility* document before removing equipment covers or connecting or disconnecting any signal wires.

Installing the SCXI-1125 Module into the SCXI Chassis

Refer to the *SCXI Quick Start Guide* to install your SCXI-1125 module.

Connecting the SCXI-1125 in an SCXI Chassis to an E/M/X Series DAQ Device for Multiplexed Scanning

Refer to the *SCXI Quick Start Guide* to install the cable adapter and connect the SCXI modules to the DAQ device.

If you have already installed the appropriate software, refer to Chapter 3, *Configuring and Testing*, to configure the SCXI-1125 module(s).

Connecting the SCXI-1125 in a PXI/SCXI Combination Chassis to an E/M/X Series DAQ Device for Multiplexed Scanning

Refer to the *SCXI Quick Start Guide* to connect the SCXI modules to the DAQ device.

If you have already installed the appropriate software, refer to Chapter 3, *Configuring and Testing*, to configure the SCXI-1125 module(s).

Connecting the SCXI-1125 to an E/M/X Series DAQ Device for Parallel Scanning

This configuration allows you to route all eight channels of the SCXI-1125 in parallel to eight input channels of the E/M/X Series DAQ device to which it is connected. In this mode, you cannot directly access the CJC channel. Use this mode if you require a higher scanning rate than an SCXI system in multiplexed mode allows.

Note You can also use the SCXI-1125 with an S Series DAQ device in parallel mode.

If you have not already installed all the modules, refer to the *Installing the SCXI-1125 Module into the SCXI Chassis* section, then complete the following steps:

1. Power off the SCXI chassis and the computer that contains the E/M/X Series DAQ device.
2. Insert the cable adapter into the rear of the SCXI-1125 module that is to be accessed in parallel mode by the E/M/X Series DAQ device. Refer to the installation guide for the cable assembly for more information.
3. Connect the cable to the back of the cable adapter ensuring that the cable fits securely.
4. Connect the other end of the cable to the E/M/X Series DAQ device that you want to use to access the SCXI-1125 in parallel mode.
5. Connect additional SCXI-1125 modules intended for parallel mode operation by repeating steps 2 through 4.
6. Check the installation, making sure the cable is securely fastened at both ends.
7. Power on the SCXI chassis.
8. Power on the computer.

If you have already installed the appropriate software, you are ready to configure the SCXI-1125 module(s) you installed for parallel mode operation.

Verifying the SCXI-1125 Installation in Software

Refer to the *SCXI Quick Start Guide* for information about verifying the SCXI installation.

Installing SCXI Using NI-DAQmx in Software

Refer to the *SCXI Quick Start Guide* for information about installing modules using NI-DAQmx in software.

Manually Adding Modules in NI-DAQmx

If you did not auto-detect the SCXI modules, you must manually add each of the modules. Refer to the *SCXI Quick Start Guide* to manually add modules.

Note NI recommends auto-detecting modules for the first time configuration of the chassis.

Installing SCXI Using Traditional NI-DAQ (Legacy) in Software

Refer to the *SCXI Quick Start Guide* for information about installing modules using Traditional NI-DAQ (Legacy) in software.

Manually Adding Modules in Traditional NI-DAQ (Legacy)

If you did not auto-detect the SCXI modules, you must manually add each of the modules. Refer to the *SCXI Quick Start Guide* to manually add modules.

Note NI recommends auto-detecting modules for the first time configuration of the chassis.

Verifying and Self-Testing the Installation

The verification procedure for the SCXI chassis is the same for both NI-DAQmx and Traditional NI-DAQ (Legacy). To test the successful installation for the SCXI chassis, refer to the *SCXI Quick Start Guide.* Verify that the chassis is powered on and correctly connected to an E/M/X Series DAQ device.

After verifying and self-testing the installation, the SCXI system should operate properly with your ADE software. If the test did not complete successfully, refer to Chapter 3, *Configuring and Testing*, for troubleshooting steps.

Troubleshooting the Self-Test Verification

If the Self-Test Verification did not verify the chassis configuration, complete the steps in this section to troubleshoot the SCXI configuration.

Troubleshooting in NI-DAQmx

- If you get a **Verify SCXI Chassis** message box showing the SCXI chassis model number, **Chassis ID: *x***, and one or more messages stating **Slot Number: *x* Configuration has module: SCXI-*XXXX*** or **1125, hardware in chassis is: Empty**, take the following troubleshooting actions:
  - Make sure the SCXI chassis is powered on.
  - Make sure all SCXI modules are properly installed in the chassis. Refer to the *SCXI Quick Start Guide* for proper installation instructions.
  - Make sure the cable between the SCXI chassis and E/M/X Series DAQ device is properly connected.
  - Inspect the cable connectors for bent pins.
  - Make sure you are using the correct NI cable assembly.
  - Test the E/M/X Series DAQ device to verify it is working properly. Refer to the E/M/X Series DAQ device help file for more information.
- If you get a **Verify SCXI Chassis** message box showing the SCXI chassis model number, **Chassis ID: *x***, and the message **Slot Number: *x* Configuration has module: SCXI-*XXXX*** or **1125, hardware in chassis is: SCXI-*YYYY*, 1125**, or **Empty**, complete the following troubleshooting steps to correct the error.
  1. Expand the list of NI-DAQmx devices by clicking the **+** next to **NI-DAQmx Devices**.
  2. Right-click the SCXI chassis and click **Properties** to load the chassis configurator.
  3. Under the **Modules** tab, ensure that the cabled module is listed in the correct slot.

4. If the cabled module is not listed in the correct slot, complete the following troubleshooting steps:
   a. If the cabled module is not listed in the correct slot and the slot is empty, click the drop-down listbox next to the correct slot and select the cabled module. Configure the cabled module following the steps listed in the *SCXI Quick Start Guide*. Click **OK**.
   b. If another module appears where the cabled module should be, click the drop-down listbox next to the correct slot and select the cabled module. A message box appears asking you to confirm the module replacement. Click **OK**. Configure the cabled module following the steps listed in the *SCXI Quick Start Guide*. Click **OK**.

- Ensure that you have the highest priority SCXI module cabled to the E/M/X Series DAQ device. Refer to the *SCXI Quick Start Guide* to find out which SCXI module in the chassis should be cabled to the E/M/X Series DAQ device.
- After checking the preceding items, return to the *Troubleshooting the Self-Test Verification* section and retest the SCXI chassis.

If these measures do not successfully configure the SCXI system, contact NI. Refer to the *Technical Support Information* document for contact information.

2

Connecting Signals

This chapter describes the input and output signals connections to the SCXI-1125 module with the module front connector and the rear signal connector. This chapter also includes specifications and connection instructions for the signals on the SCXI-1125 module connectors.

Note Refer to the *Read Me First: Safety and Electromagnetic Compatibility* document before removing equipment covers or connecting or disconnecting any signal wires.

Note For EMC compliance, operate this device with shielded cables.

The isolated channels of the SCXI-1125 allow you to make precision high-voltage measurements or low-voltage measurement of signals where high common-mode voltages are present while protecting sensitive computer parts and equipment connected to the module. The isolated amplifiers fulfill two purposes on the SCXI-1125 module. First, they can convert a small signal on a high common-mode voltage into a single-ended signal with respect to the SCXI-1125 chassis ground. With this conversion, you can extract the analog input signal from a high common-mode voltage before sampling by the E/M/X Series DAQ device. Second, the isolation amplifier amplifies and filters an input signal resulting in increased measurement resolution and accuracy. The following sections explain how to make signal connections to maximize the effectiveness of the SCXI-1125 for conditioning analog signals.

AC and DC Voltage Connections

You can make input signal connections to the SCXI-1125 through the front signal connector or through accessory terminal blocks. Chapter 1, *About the SCXI-1125*, contains a list of SCXI-1125-compatible terminal blocks. Terminal blocks provide features such as screw-terminal connectivity, BNC connectivity, cold-junction temperature measurement, and attenuation.

The pin assignment for the SCXI-1125 front signal connector is shown in Table 2-1. The positive input terminal for each channel is in Column A and the negative input terminal for each channel is in Column C. Input

connections to each channel are fully floating with respect to ground and completely isolated from other channels. You can operate with common-mode voltage levels up to 300 V_{rms}.

Figures 2-1 through 2-4 show signal connection methods that give the highest noise immunity.

Ground-Referenced Signal

When the negative input signal line is connected either directly or indirectly to earth ground (usually at the transducer end), connect this line to the negative input terminal, as shown in Figure 2-1. No ground connection is made at the SCXI-1125. This situation includes cases where a floating source can be on a high common-mode voltage that is ground referenced.

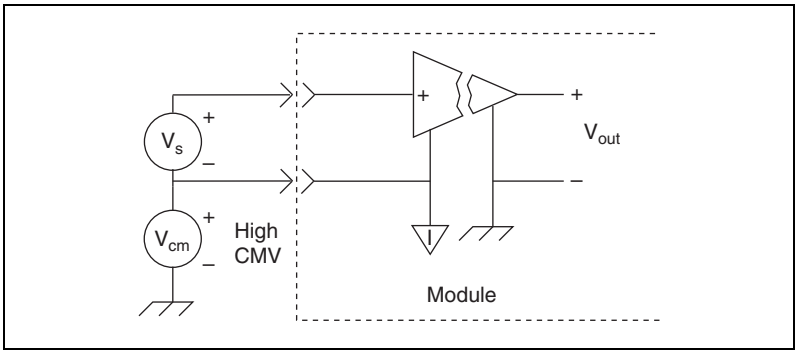

Figure 2-1. Connecting a Ground-Referenced Signal

Floating Signal

In cases where both signal lines at the transducer end are floating and no common-mode voltage exists, establish an earth connection at the SCXI-1125 by connecting the negative input line to chassis ground in the terminal block, as shown in Figure 2-2. This eliminates noise that can be on the floating signal. If the floating signal is not configured like Figure 2-2, the noise can couple to the chassis ground through the amplifier and exhibit a differential mode signal that can be amplified by the amplifier. Connecting the signal to chassis ground breaks the isolation barrier.

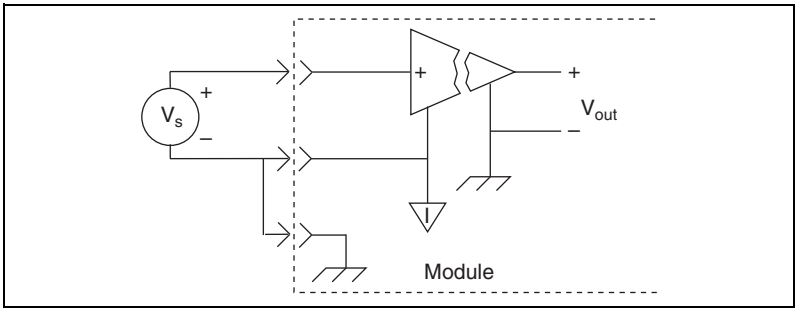

Figure 2-2. Connecting a Floating Signal

AC-Coupling

You can have an application where you wish to measure only AC voltages and remove the DC component of a signal before amplification and sampling. In such cases, you can connect a capacitor in series with one or both input terminals of the SCXI-1125, as shown in Figures 2-3 and 2-4. A resistor is connected across the input terminals of the channel to DC reference the input stage of the SCXI-1125. You do not need to use a bias resistor with any high-voltage terminal blocks, since the terminal blocks already have a resistor between the input terminals, or with the SCXI-1305 BNC connectivity terminal block, since this terminal block already has an AC-coupling option built in.

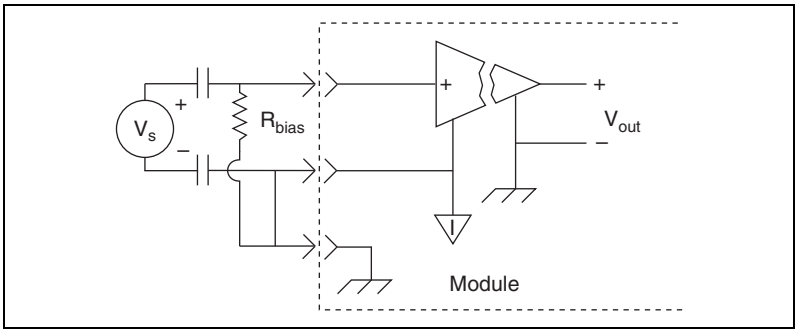

Figure 2-3. Connecting a Floating AC-Coupled Signal

Caution Connecting a signal source to chassis ground in Figures 2-2 and 2-3, breaks the isolation barrier.

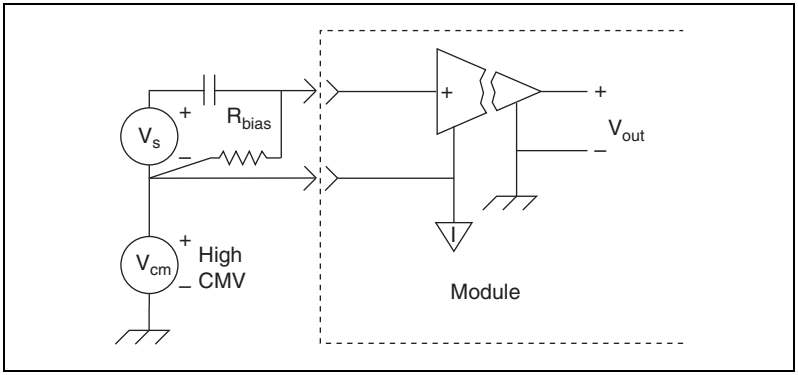

Figure 2-4. Connecting a Ground-Referenced AC-Coupled Signal

NI recommends using a bias resistor between 100 kΩ and 1 MΩ. An added DC offset voltage results, due to input bias current flowing through the bias resistor. For example, with a 1 MΩ bias resistor and the specified maximum input bias current of 1 nA, you have a maximum added input offset voltage of ±1 mV in addition to the initial offset voltage.

Since only the AC signal is of interest when AC-coupling, you can choose to remove the DC offset in software by using a simple highpass filter.

Caution Pins A2, A4, A8, C2, C4, C6, and C8 on the front signal connector are not isolated and do not have the same protection circuitry as the positive and negative analog input pairs discussed in the *Floating Signal* section. Connecting external signals to these pins can damage the SCXI-1125 module.

Pin Assignments

The front signal connector is a special 32-pin DIN C male front connector used for connecting analog input signals, including the CJC, to the analog circuitry of the SCXI-1125. This connection allows access to the eight differential analog input signals. The positive terminal is AI*x* + and the negative terminal AI*x* –. A missing pin exists between two consecutive input channels to meet the UL spacing requirements for high voltage signals. CJ TEMP is the signal connection used by the cold-junction channel on the SCXI-1125. The signals on pins A6, A8, C6, and C8 are reserved for serial communication. The +5 V signal and CHS GND signals are used as the power supply and ground signals for the CJC sensor and other circuitry on the terminal block. The pin assignments for the SCXI-1125 front signal connection are shown in Table 2-1.

Caution Do not make signal connections to pins A2, A4, A6, A8, C2, C4, C6, or C8 on the front signal connector. Connecting external signals to these pins can damage the SCXI-1125 Module.

Table 2-1. Front Signal Pin Assignments

Front Connector Diagram	Pin Number	Column A	Column B	Column C
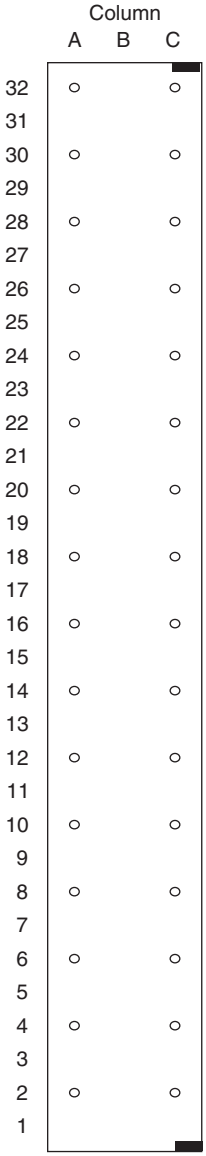	32	AI 0 +	—	AI 0 –
	31	—	—	—
	30	AI 1 +	—	AI 1 –
	29	—	—	—
	28	NC	—	NC
	27	—	—	—
	26	AI 2 +	—	AI 2 –
	25	—	—	—
	24	AI 3 +	—	AI 3 –
	23	—	—	—
	22	NC	—	NC
	21	—	—	—
	20	AI 4 +	—	AI 4 –
	19	—	—	—
	18	AI 5 +	—	AI 5 –
	17	—	—	—
	16	NC	—	NC
	15	—	—	—
	14	AI 6 +	—	AI 6 –
	13	—	—	—
	12	AI 7 +	—	AI 7 –
	11	—	—	—
	10	NC	—	NC
	9	—	—	—
	8	RSVD	—	RSVD
	7	—	—	—
	6	RSVD	—	RSVD
	5	—	—	—
	4	+5 V	—	CJ TEMP
	3	—	—	—
NC means no connection	2	CHS GND	—	RSVD
— means no pin	1	—	—	—

Temperature Sensor Connection

Pin C4 on the front signal connector is used to connect to a terminal block temperature sensor. The temperature sensor channel is *not* isolated and is referenced to the chassis ground. The connection is overvoltage protected to ±25 VDC with power on and ±15 VDC with power off.

Rear Signal Connector

The rear signal connector is a 50-pin male ribbon cable connector used for analog signal connectivity and communication between the SCXI-1125 and the connected DAQ device. The rear signal connector allows the DAQ device to access all eight differential analog output signals from the SCXI-1125. The positive terminal of each analog output is CH *x* + and the negative terminal CH *x* –. Grounding signals, AI GND and OUT REF, provide reference signals needed in the various analog referencing modes on the E/M/X Series DAQ device. In multiplexed mode, the CH 0 signal pair is used for sending all eight channels of the SCXI-1125, and other analog signals from other modules, to the connected E/M/X Series DAQ device. If the module is directly connected to the E/M/X Series DAQ device, the other analog channels of the E/M/X Series DAQ device are still unavailable for general-purpose analog input because they are still connected to the amplifier outputs of the SCXI-1125 in multiplexed mode.

The communication signals between the DAQ device and the SCXI system are SER DAT IN, SER DAT OUT, DAQ D*/A, SLOT 0 SEL*, SER CLK, and AI HOLD COMP, AI HOLD. The digital ground, D GND on pins 24 and 33, provides a separate ground reference for the communication signals. SER DAT IN, SER DAT OUT, DAQ D*/A, SLOT 0 SEL*, and SER CLK are the communication lines for programming the SCXI-1125. The AI HOLD COMP, AI HOLD and SYNC signals are the signals necessary for multiplexed mode scanning. If the E/M/X Series DAQ device is connected to the SCXI-1125, these digital lines are unavailable for general-purpose digital I/O. The rear signal pin assignments are shown in Table 2-2.

Table 2-2. Rear Signal Pin Assignments

Rear Connector Diagram	Signal Name	Pin Number	Pin Number	Signal Name
NC means no connection	AI GND	1	2	AI GND
	CH 0 +	3	4	CH 0 –
	CH 1 +	5	6	CH 1–
	CH 2 +	7	8	CH 2 –
	CH 3 +	9	10	CH 3 –
	CH 4 +	11	12	CH 4 –
	CH 5 +	13	14	CH 5 –
	CH 6 +	15	16	CH 6 –
	CH 7 +	17	18	CH 7 –
	OUT REF	19	20	NC
	NC	21	22	NC
	NC	23	24	D GND
	SER DAT IN	25	26	SER DAT OUT
	DAQ D*/A	27	28	NC
	SLOT 0 SEL*	29	30	NC
	NC	31	32	NC
	D GND	33	34	NC
	NC	35	36	AI HOLD COMP, AI HOLD
	SER CLK	37	38	NC
	NC	39	40	NC
	NC	41	42	NC
	NC	43	44	NC
	NC	45	46	SYNC
	NC	47	48	NC
	NC	49	50	NC

3

Configuring and Testing

This chapter discusses configuring the SCXI-1125 in MAX for use with either NI-DAQmx or Traditional NI-DAQ (Legacy), creating and testing a virtual channel, global channel or task. For more information about the relationship between the settings and the measurements and how to configure settings in your application, refer to Chapter 4, *Theory of Operation*.

SCXI-1125 Software-Configurable Settings

This section describes the common software configurable settings and how to verify the signal using both NI-DAQmx and Traditional NI-DAQ (Legacy).

Common Software-Configurable Settings

This section describes the most frequently used software-configurable settings for the SCXI-1125. Refer to Chapter 4, *Theory of Operation*, for a complete list of software-configurable settings.

Filter Bandwidth

Filter bandwidth is a software-configurable setting that allows you to select a lowpass filter cutoff frequency. You can choose 4.0 Hz or 10 kHz.

Gain/Input Range

Gain/input range is a software-configurable setting that allows you to choose the appropriate amplification to fully utilize the range of the E/M/X Series DAQ device. In most applications NI-DAQ chooses and sets the gain for you determined by the input range.

Connecting the SCXI-1125 in an SCXI Chassis to an E/M/X Series DAQ Device for Multiplexed Scanning

Refer to the *SCXI Quick Start Guide* to install the cable adapter and connect the SCXI modules to the DAQ device.

If you have already installed the appropriate software, refer to Chapter 3, *Configuring and Testing*, to configure the SCXI-1125 module(s).

Connecting the SCXI-1125 in a PXI/SCXI Combination Chassis to an E/M/X Series DAQ Device for Multiplexed Scanning

Refer to the *SCXI Quick Start Guide* to connect the SCXI modules to the DAQ device.

If you have already installed the appropriate software, refer to Chapter 3, *Configuring and Testing*, to configure the SCXI-1125 module(s).

Configurable Settings in MAX

Note If you are not using an NI ADE, using an NI ADE prior to version 7.0, or are using an unlicensed copy of an NI ADE, additional dialog boxes from the NI License Manager appear allowing you to create a task or global channel in unlicensed mode. These messages continue to appear until you install version 7.0 or later of an NI ADE.

This section describes where users can access each software-configurable setting for modification in MAX. The location of the settings varies depending on the version of NI-DAQ you use. Refer to either the *NI-DAQmx* section or the *Traditional NI-DAQ (Legacy)* section. You also can refer to the *DAQ Getting Started* guides and the *SCXI Quick Start Guide* for more information about installing and configuring your hardware. You also can use the DAQ Assistant to graphically configure common measurement tasks, channels, or scales.

NI-DAQmx

In NI-DAQmx, you can configure software settings such as filter bandwidth and gain/input signal range in the following ways:

- Task or global channel in MAX
- Functions in your application

Note All software-configurable settings are not configurable both ways. This section only discusses settings in MAX. Refer to Chapter 4, *Theory of Operation*, for information about using functions in your application.

These sections describe settings that you can change in MAX and where they are located.

- Filter bandwidth—configure the **Device** tab using either **NI-DAQmx Task** or **NI-DAQmx Global Channel**. You also can set the value through your application.
- Input signal range—configure the input signal range using either **NI-DAQmx Task** or **NI-DAQmx Global Channel**. When you set the minimum and maximum range of **NI-DAQmx Task** or **NI-DAQmx Global Channel**, the driver selects the best gain for the measurement. You also can set it through your application.
- Modes of operation—configure only using chassis installation in software. Refer to Chapter 1, *About the SCXI-1125*, for more information about chassis installation. The default setting in NI-DAQmx is multiplexed.
- Terminal block attenuation—for terminal blocks with manually adjustable attenuation such as the SCXI-1327, you must configure the attenuator in the chassis configurator. Refer to the *SCXI Quick Start Guide* for more information.

Note Refer to Chapter 4, *Theory of Operation*, for information about configuring the settings for your application using Traditional NI-DAQ (Legacy).

Creating a Voltage Global Channel or Task

To create a new NI-DAQmx global task or channel, complete the following steps:

1. Double-click **Measurement & Automation** on the desktop.
2. Right-click **Data Neighborhood** and select **Create New**.
3. Select **NI-DAQmx Task** or **NI-DAQmx Global Channel**, and click **Next**.

4. Select **Analog Input**.
5. Select **Voltage**.
6. If you are creating a task, you can select a range of channels by holding down the <Shift> key while selecting the channels. You can select multiple individual channels by holding down the <Ctrl> key while selecting channels. If you are creating a channel, you can only select one channel. Click **Next**.
7. Name the task or channel and click **Finish**.
8. In the box labelled **Channel List**, select the channel(s) you want to configure. You can select a range of channels by holding down the <Shift> key while selecting the channels. You can select multiple individual channels by holding down the <Ctrl> key while selecting channels.
9. Enter the specific values for your application in the **Settings** tab. Context help information for each setting is provided on the right side of the screen. Refer to Chapter 3, *Configuring and Testing*, for more information.
10. Click the **Device** tab and select the autozero mode and lowpass filter cutoff frequency.
11. If you are creating a task and want to set timing or triggering controls, enter the values in the **Task Timing** and **Task Triggering** tabs.

Traditional NI-DAQ (Legacy)

In Traditional NI-DAQ (Legacy), you can configure software settings, such as configuration, voltage excitation level, filter bandwidth, gain/input signal range, and calibration settings in the following three ways:

- Module property pages in MAX
- Virtual channels properties in MAX
- Functions in your ADE

Note All software-configurable settings are not configurable in all three ways. This section only discusses settings in MAX. Refer to Chapter 4, *Theory of Operation*, for information about using functions in your application.

Most of these settings are available in module properties and/or using virtual channels:

- Filter bandwidth—configure only using module properties. You also can set bandwidth through your application. The default filter bandwidth level for Traditional NI-DAQ (Legacy) is 4 Hz.

- Gain/input signal range—configure gain using module properties. When you set the minimum and maximum range of the virtual channel, the driver selects the best gain. The default gain setting for Traditional NI-DAQ (Legacy) is 1000.
- Terminal block gain—this setting is only configurable if you selected a terminal block that supports adjustable attenuation.
- Modes of operation—configure only using module properties. The default setting in Traditional NI-DAQ (Legacy) is multiplexed mode.

Note Refer to Chapter 4, *Theory of Operation*, for information about configuring the settings for your application using Traditional NI-DAQ (Legacy).

Configuring Module Property Pages in Traditional NI-DAQ (Legacy)

1. Right-click the SCXI-1125 module you want to configure and select **Properties**. Click **General**.
2. If the module you are configuring is connected to an E Series DAQ device, select that device by using **Connected to**. If you want this E Series DAQ device to control the chassis, confirm there is a check in the **This device will control the chassis** checkbox. If the module you are configuring is not connected to an E Series DAQ device, select **None**.
3. Click the **Channel** tab. Select the appropriate gain and filter for each channel. If you want to configure all the channels at the same time, select the **Channel** drop-down menu, scroll to the bottom, and select **All Channels**. Refer to the *SCXI-1125 Software-Configurable Settings* section for a detailed description of each setting. Click **Apply**.
4. Click **Accessory**. Select the accessory you connected to the module. If the accessory has a configurable gain, select the desired gain. When configuration is complete, click **OK**.

The Traditional NI-DAQ (Legacy) chassis and SCXI-1125 should now be configured properly. If you need to change the module configuration, right-click the module and repeat steps 1 through 4. Test the system following the steps in the *Troubleshooting the Self-Test Verification* section of Chapter 1, *About the SCXI-1125*.

Creating a Virtual Channel

To create a virtual channel, complete the following steps:

1. Right-click **Data Neighborhood** and select **Create New**.
2. Select **Traditional NI-DAQ Virtual Channel** and click **Finish**.
3. Click **Add Channel**.
4. Select **Analog Input** from the drop-down list and click **Next**.
5. Enter the **Channel Name** and **Channel Description**, and click **Next**.
6. Select **Voltage** from the drop-down list and click **Next**.
7. Enter the units and input range, and click **Next**.
8. Select the appropriate scaling option and click **Next**.
9. Enter the following information:
   a. **What DAQ hardware will be used?** from the drop-down list.
   b. **What channel on your DAQ hardware?** from the drop-down list.
   c. **Which analog input mode will be used?** from the drop-down list.
10. Click **Finish**.

Verifying the Signal

This section describes how to take measurements using test panels in order to verify signal, and configuring and installing a system in NI-DAQmx and Traditional NI-DAQ (Legacy).

Verifying the Signal in NI-DAQmx Using a Task or Global Channel

You can verify the signals on the SCXI-1125 using NI-DAQmx by completing the following steps:

1. Expand **Data Neighborhood**.
2. Expand **NI-DAQmx Tasks**.
3. Click the task.
4. Click the **Add Channels** or **Remove Channels** button to add/remove channels.
5. In the window that appears, click the **+** next to the module of interest.

6. Select the channel(s) you want to verify. You can select a block of channels by holding down the <Shift> key or multiple channels by holding down the <Ctrl> key. Click **OK**.
7. Enter the appropriate information on the **Settings** tab.
8. Click the **Device** tab.
9. Enter the appropriate information on the **Device** tab.
10. Click the **Test** button.
11. Click the **Start** button.
12. After you have completed verifying the channels, click the **Stop** button.

You have now verified the SCXI-1125 configuration and signal connection.

Note For more information about how to further configure the SCXI-1125, or how to use LabVIEW to configure the module and take measurements, refer to Chapter 4, *Theory of Operation*.

Verifying the Signal in Traditional NI-DAQ (Legacy)

This section discusses how to verify the signal in Traditional NI-DAQ (Legacy) using channel strings and virtual channels.

Verifying the Signal Using Channel Strings

The format of the channel string is as follows:

ob***x*** ! sc***y*** ! md***z*** ! *channel*

where

- ob***x*** is the onboard E Series DAQ device channel, with ***x*** representing a particular channel where the multiplexed channels are sent. This value is 0 for E Series DAQ device channel 0 in a single-chassis system. In a multichassis or remote chassis system, the E Series DAQ device channel *x* corresponds to chassis number $n - 1$, where E Series DAQ device channel *x* is used for scanning the *n*th chassis in the system.
- sc***y*** is the SCXI chassis ID, where ***y*** is the number you chose when configuring the chassis.
- md***z*** is the slot position where the module is located, with ***z*** being the particular slot number. The slots in a chassis are numbered from left to right, starting with 1.
- ***channel*** is the channel that is sampled from module *z*.

Use the format `obx ! scy ! mdz !` ***n*** to verify the signal, where ***n*** is a single input channel.

Complete the following steps to use channel strings in verifying the signal:

1. Expand **Devices and Interfaces**.
2. Expand **Traditional NI-DAQ Devices**.
3. Right-click the appropriate E Series DAQ device.
4. Click **Test Panels**.
5. Enter the channel string.
6. Enter the input limits.
7. Select the **Data Mode**.
8. Select the **Y Scale Mode**.

Refer to the *LabVIEW Help* for more information and for proper formatting of channel strings for different uses.

Verifying the Signal Using Virtual Channel

If you have already created a virtual channel, complete the following steps to verify the signal:

1. Right-click the virtual channel you want to verify and select **Test**.
2. In **Channel Names**, select the channel you want to verify.
3. When you have completed verifying the channel, click **Close**.

4

Theory of Operation

The section includes a brief overview and a detailed discussion of the circuit features of the module. The two major modes of operation, multiplexed and parallel mode, are discussed. Refer to Figure 4-1 while reading this section.

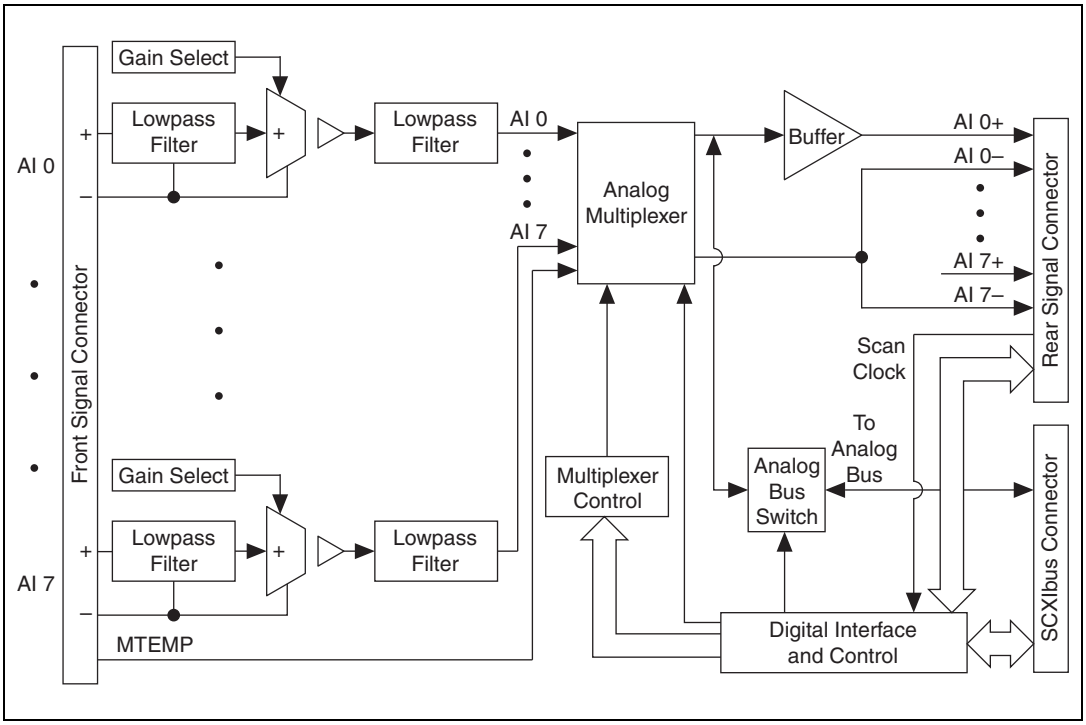

Figure 4-1. SCXI-1125 Block Diagram

Gain

The SCXI-1125 has 12 different gain settings, from 1 to 2000, enabling signal ranges ±5 V to ±2.5 mV. When the SCXI-1125 is used with a terminal block that provides attenuation, the input range expands up to 1000 V. Refer to Appendix A, *Specifications* for a full list of input ranges.

Refer to the *Configurable Settings in MAX* section of Chapter 3, *Configuring and Testing*, for more information about programmatically setting gain using range settings in MAX. For more information about programmatically setting gain using range settings in NI-DAQmx and Traditional NI-DAQ (Legacy), refer to the *Developing Your Application in NI-DAQmx* section or the *Developing Your Application in Traditional NI-DAQ (Legacy)* section, respectively, of Chapter 5, *Using the SCXI-1125*.

Filter Bandwidth and Cutoff Frequency

The SCXI-1125 provides two filtering stages with an overall response of a four-pole Butterworth filter. You can control the cutoff frequency of the filter through software. You can choose 4 Hz or 10 kHz. For additional flexibility in cutoff frequency settings and for greater suppression, NI recommends combining the hardware filtering provided by the SCXI-1125 with digital filtering. NI recommends using the Advanced Analysis functions of LabVIEW, LabWindows/CVI, or Measurement Studio. By combining hardware anti-aliasing with digital filtering, you can choose any cutoff frequency.

The Advanced Analysis functions are only available in LabVIEW Full or Professional Development Systems, and LabWindows/CVI Base or Full Development Systems.

Refer to the *Configurable Settings in MAX* section of Chapter 3, *Configuring and Testing*, for more information about programmatically setting the cutoff frequency of the filter in MAX. For more information about programmatically setting the cutoff frequency of the filter in NI-DAQmx and Traditional NI-DAQ (Legacy), refer to the *Developing Your Application in NI-DAQmx* section or the *Developing Your Application in Traditional NI-DAQ (Legacy)* section, respectively, of Chapter 5, *Using the SCXI-1125*.

Operating in Multiplexed Mode

You can configure the SCXI-1125 to operate in multiplexed mode as described in Chapter 1, *About the SCXI-1125*. Using this mode of operation, you can scan all input channels of the SCXI-1125 into one output channel that is read by the National Instruments DAQ device. You can also multiplex the CJC channel that connects to a sensor on the SCXI terminal block for making temperature measurements.

Multiplexed Hardware Operation Theory

When you configure a module for multiplexed mode operation, the routing of multiplexed signals to the E/M/X Series DAQ device depends on which module in the SCXI system is cabled to the E/M/X Series DAQ device. There are several possible scenarios for routing signals from the multiplexed modules to the E/M/X Series DAQ device. If the module being scanned is not directly cabled to the E/M/X Series DAQ device, the module sends its signals through the SCXIbus to the cabled module. The cabled module, whose routing is controlled by the SCXI chassis, routes the SCXIbus signals to the E/M/X Series DAQ device through the CH 0 signal on the rear signal connector. If the E/M/X Series DAQ device scans the cabled module, the module routes its input signals through the CH 0 signal on the rear signal connector. The power of SCXI multiplexed scanning is its ability to route many input channels to a single channel on the E/M/X Series DAQ device.

Note The SCXI-1125 parallel outputs continuously drive the rear signal connector output pins even when you configure the module in multiplexed mode. If the module is cabled to an E/M/X Series DAQ device in multiplexed mode, the differential inputs 1 through 7 on the E/M/X Series DAQ device cannot be used for general-purpose analog input. Refer to Appendix D, *Common Questions*, for more information about available pins on the rear signal connector.

Multiplexed mode is typically used for performing scanning operations with the SCXI-1125. Immediately prior to a multiplexed scanning operation, the SCXI chassis is programmed with a module scan list that controls which module sends its output to the SCXIbus during a scan. You can specify this list to scan the modules in the chassis in any order, with an arbitrary number of channels for each module entry in the list. You can randomly scan the channels on the SCXI-1125, meaning channels can be in any order and occur multiple times in a single scan. When performing multiple scans, the list pointer of the module automatically wraps around and starts scanning with the first channel in the scan list.

Operating in Parallel Mode

You can configure the SCXI-1125 to operate in parallel mode as described in Chapter 1, *About the SCXI-1125*. In parallel mode, all eight analog output channels on the SCXI-1125 are connected to eight analog input channels on the E/M/X Series DAQ device. The CJC channel is not accessible. Every SCXI-1125 configured for parallel mode must have a E/M/X Series DAQ device directly cabled to it.

Note You can also use the SCXI-1125 with an S Series DAQ device in parallel mode.

Theory of Parallel Hardware Operation

In parallel mode, the CH 0 signal on the rear signal connector is configured as the output of the SCXI-1125 analog input channel 0. The rear signal connector carries each of the analog outputs of the SCXI-1125 to the connected DAQ device. You can use an SCXI-1180 feedthrough connector to make each of the outputs available at the front of the chassis; which is useful for cascading these signals to other modules for additional signal conditioning purposes. Parallel mode allows you to bypass scanning and you are not limited by the settling time required by the multiplexer of SCXI-1125. You can scan the channels more accurately at a faster rate, depending on which E/M/X Series DAQ device you connect to the module.

5

Using the SCXI-1125

This chapter discusses typical applications for the SCXI-1125. While this list is not comprehensive, it provides some guidance about how to improve measurement accuracy for some of the most popular applications of the SCXI-1125. Advanced operations such as calibration and using the CJC channel are discussed as well.

Temperature Measurements Using Thermocouples

Making isolated temperature measurements from thermocouples is a common use of the SCXI-1125. This section discusses how to use thermocouples, CJC, and how to calculate the temperature accuracy of the SCXI-1125.

NI recommends using the SCXI-1328 terminal block to make thermocouple measurements with the SCXI-1125. Although you can use many of the SCXI terminal blocks for thermocouple measurements, the SCXI-1328 has an isothermal design that reduces temperature gradients within the terminal block housing. This design reduces the CJC errors which might reduce the accuracy of your temperature measurement. Most SCXI terminal blocks available for the SCXI-1125 contain a cold-junction temperature sensor, which is used for measuring ambient temperature. This sensor connects to a special channel on the SCXI-1125 inside the terminal block close to where the thermocouple connects to the screw terminals.

Note Place the SCXI chassis away from extreme temperature gradients to minimize the temperature gradient inside the terminal block and maintain its isothermal nature for accurate CJC.

A thermocouple relies on the principle that a small voltage that varies with temperature is produced at the junction of two dissimilar metals. CJC is necessary because the junction between the end of the thermocouple lead wires and the screw terminals produces a small potential difference, adding error to the thermocouple voltage. Knowing the temperature at the point where the thermocouple is connected to the measurement instrument allows you to determine the correct temperature reading at the thermocouple junction. Due to the nonlinear relationship between

thermocouple junction voltage and temperature, this voltage conversion (linearization) is best done through software.

NI-DAQ has built-in scaling for most thermocouple types. In NI-DAQmx, you can create a thermocouple task or global channel. In Traditional NI-DAQ (Legacy), you can create a thermocouple virtual channel.

If you choose to not let the driver scale the voltage readings for you in software, you must do several conversions by using conversion coefficients that reflect the voltage-temperature relationship for the type of thermocouple and CJC being used. Complete the following steps to accurately determine thermocouple temperature:

1. Read the voltage from the CJC sensor and convert this voltage to a temperature.
2. Convert this temperature to the corresponding voltage for the thermocouple type in use.
3. Read the input voltage from the thermocouple.
4. Add the two voltages.
5. Translate the resultant voltage into the thermocouple temperature reading.

You have completed the steps to get the true temperature reading from the thermocouple junction.

National Instruments software ADEs have useful conversion functions for CJC. In LabVIEW, virtual channels with the CJC channel invoked or the Convert Thermocouple Reading VI are used. In C, use the NI-DAQ function, `Thermocouple_Convert`. In C, you might also need to use the function `Thermistor_Convert`, if your terminal block uses a thermistor to perform CJC. For more information about CJC, refer to your software ADE user documentation.

To calculate the temperature accuracy of your SCXI-1125, you must consider several factors. First, the type of sensor and the temperature range you expect directly affects which gain your SCXI-1125 module uses for voltage readings, thereby directly affecting the resolution with which you can read temperature. After determining the range necessary for your application, you can apply the measurement accuracy specifications of the SCXI-1125; such as offset error, gain error, and noise to determine how these will affect your temperature measurement. Next, you must consider the accuracy of your cold-junction sensor and incorporate this into the total temperature error of your reading. Finally, the accuracy of the DAQ device you use must be factored in to determine your overall system error.

Complete the following steps to calculate the overall temperature error using the SCXI-1125 with an E/M/X Series MIO DAQ device:

1. Based on the required temperature range and the type of sensor, determine the gain to use. For example, using a K-type thermocouple with a required temperature range of 0 to 100 °C, the corresponding voltage range is –1.002 mV to 4.0962 mV (averaging 41.0 µV/°C in this range). For this example, use a gain of 1000 for this temperature range to get maximum temperature resolution.
2. Look up the analog accuracy specifications from Appendix A, *Specifications*, for the gain and filter settings you have chosen. You must consider how offset, gain, and system noise affect your measurement. You might also consider common-mode rejection, temperature drift, and other specifications based on the operating environment. For example, using a gain of 1000, the offset error is ± 0.2 µV, the gain error is ± 0.03%, which corresponds to ± 1.43 µV at full-scale temperature, and the system noise is 100 V_{rms} (use peak noise, which is about 3 times this, or 300 nV_{pk}) because of the 4 Hz filter. In this example you might or might not be able to average out the noise. The total error is ± 1.73 µV at the full-scale temperature range, which gives a preliminary accuracy of ± 0.04 °C (1.73 µV divided by 41.0 µV/°C).
3. Consider the accuracy of the cold-junction sensor you are using. For example, using the SCXI-1328, which, at about room temperature with little temperature gradient, has an accuracy of ± 0.5 °C. You must convert this temperature accuracy back to a voltage corresponding to a K-type thermocouple accuracy at 25 °C. This conversion produces about ± 20 µV of error.
4. Add the two voltages and determine the overall temperature error. For example, the total error due to the SCXI portion of the system in this example now becomes ± 21.73 µV. This total error corresponds to about ± 0.53 °C (21.73 µV divided by 41.0 µV/°C) temperature error using the K-type thermocouple at this range.
5. Determine the contribution of DAQ device error. For example, if using a 12-bit DAQ device, the DAQ device contributes a gain of 2, and therefore the code width becomes 2.44 µV. As a result, the total system error now becomes ± (21.73 µV + 2.44 µV), which corresponds to about 0.59 °C. If you were to choose a 16-bit board, you can achieve a code width of 0.153 µV, producing a total system error of 0.53 °C.

Making High-Voltage Measurements

Another common use of the SCXI-1125 is to make measurements up to 1000 VDC. Making measurements beyond ± 5 V requires use of the an attenuator terminal block. The SCXI-1327 and SCXI-1313A terminal blocks have a selectable attenuator for choosing between no attenuation or 100:1 attenuation, which allows you to use the SCXI-1125 with up to 300 V_{rms} when using the SCXI-1327 and up to 150 V_{rms} when using the SCXI-1313A.

The TBX-1316 has a fixed 200:1 attenuation, which allows you to use the SCXI-1125 with up to 1000 VDC, Measurement Category I.

The SCXI-1327 and SCXI-1313A also include a cold-junction sensor so you can combine thermocouple measurements with high-voltage measurements. When making signal connections, or when working with high-voltage signals, refer to the terminal block installation guide. If you are using the SCXI-1125 to measure signals with attenuation on the terminal block, an external bias resistor is *not* needed, because a bias resistor is already used for achieving the attenuation.

Table 5-1 lists the extended ranges of gain possible with the SCXI-1327 and SCXI-1313A. Table 5-2 lists the extended gain possible with the TBX-1316.

Table 5-1. Extended Gain and Range Using the SCXI-1327 or SCXI-1313A

Overall Gain	Input Range (V)	SCXI-1125 Gain	SCXI-1327 Attenuation	SCXI-1313A Attenuation
0.01	± 300	1	100	—
0.02	± 250	2	100	—
0.002	± 150	2	100	100
0.05	± 100	5	100	100
0.1	± 50	10	100	100
0.2	± 25	20	100	100
0.5	± 10	50	100	100
2.5	± 2	250	100	100

Table 5-2. Extended Gain and Range Using the TBX-1316

Overall Gain	Input Range (V)	SCXI-1125 Gain	TBX-1316 Attenuation
0.005	± 1000	1	200
0.01	± 500	2	200
0.025	± 200	5	200
0.05	± 100	10	200
0.1	± 50	20	200
0.25	± 20	50	200
1.25	± 4	250	200

The overall input impedance is reduced when attenuating the input, but this is acceptable in most applications. Refer to terminal block installation guides for more information. Appendix A, *Specifications*, shows how the analog input specifications are affected with the addition of the SCXI-1327 terminal block.

Developing Your Application in NI-DAQmx

Note If you are not using an NI ADE, using an NI ADE prior to version 7.0, or are using an unlicensed copy of an NI ADE, NI License Manager displays additional dialog boxes so you can create a task or global channel in unlicensed mode. These dialog boxes continue to appear until you install version 7.0 or later of an NI ADE.

This section describes how to configure and use NI-DAQmx to control the SCXI-1125 in LabVIEW, LabWindows/CVI, and Measurement Studio. These ADEs provide greater flexibility and access to more settings than MAX, but you can use ADEs in conjunction with MAX to quickly create a customized application.

Typical Program Flowchart

Figure 5-1 shows a typical program flowchart for creating a task to configure channels, take a measurement, analyze and present the data, stop the measurement, and clear the task.

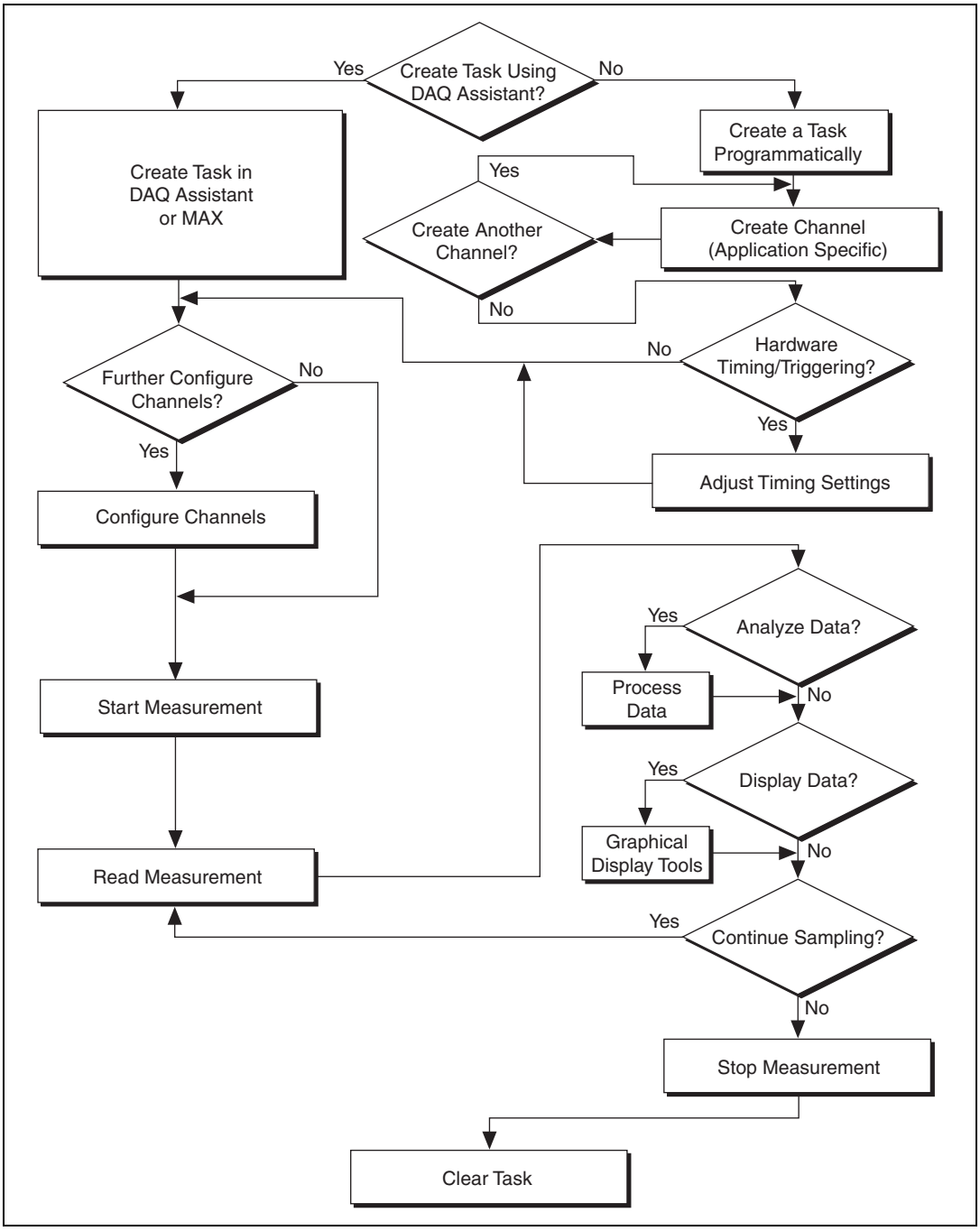

Figure 5-1. Typical Program Flowchart

General Discussion of Typical Flowchart

The following sections discuss briefly considerations for a few of the steps in Figure 5-1. These sections give an overview of some of the options and features available when programming with NI-DAQmx.

Creating a Task Using DAQ Assistant or Programmatically

When creating an application, first you must decide whether to create the appropriate task using the DAQ Assistant or programmatically in the ADE.

Developing your application using DAQ Assistant gives you the ability to configure most settings such as measurement type, selection of channels, excitation voltage, signal input limits, task timing, and task triggering. You can access the DAQ Assistant through MAX or your NI ADE. Choosing to use the DAQ Assistant can simplify the development of your application. NI recommends creating tasks using the DAQ Assistant for ease of use, when using a sensor that requires complex scaling, or when many properties differ between channels in the same task.

If you are using an ADE other than an NI ADE, or if you want to explicitly create and configure a task for a certain type of acquisition, you can programmatically create the task from your ADE using functions or VIs. If you create a task using the DAQ Assistant, you can still further configure the individual properties of the task programmatically with functions or property nodes in your ADE. NI recommends creating a task programmatically if you need explicit control of programmatically adjustable properties of the DAQ system.

Programmatically adjusting properties for a task created in the DAQ Assistant overrides the original, or default, settings only for that session. The changes are not saved to the task configuration. The next time you load the task, the task uses the settings originally configured in the DAQ Assistant.

Adjusting Timing and Triggering

There are several timing properties that you can configure through the DAQ Assistant or programmatically using function calls or property nodes. If you create a task in the DAQ Assistant, you can still modify the timing properties of the task programmatically in your application.

When programmatically adjusting timing settings, you can set the task to acquire continuously, acquire a buffer of samples, or acquire one point at a time. For continuous acquisition, you must use a while loop around the acquisition components even if you configured the task for continuous acquisition using MAX or the DAQ Assistant. For continuous and buffered acquisitions, you can set the acquisition rate and the number of samples to read in the DAQ Assistant or programmatically in your application. By default, the clock settings are automatically set by an internal clock based on the requested sample rate. You also can select advanced features such as clock settings that specify an external clock source, internal routing of the clock source, or select the active edge of the clock signal.

Configuring Channel Properties

All ADEs used to configure the SCXI-1125 access an underlying set of NI-DAQmx properties. Table 5-3 shows some of these properties. You can use Table 5-3 to determine what kind of properties you need to set to configure the module for your application. For a complete list of NI-DAQmx properties, refer to your ADE help file.

Note You cannot adjust some properties while a task is running. For these properties, you must stop the task, make the adjustment, and restart the application. Figure 5-1 assumes all properties are configured before the task is started.

Table 5-3. NI-DAQmx Properties

Property	Short Name	Description
Analog Input»General Properties» Advanced»Range»High	AI.Max	Specifies the upper limit of the input range.
Analog Input»General Properties» Advanced»Range»Low	AI.Min	Specifies the lower limit of the input range.
Analog Input»General Properties» Filter»Analog Lowpass»Cutoff Frequency	AI.Lowpass.CutoffFreq	Specifies in hertz the frequency corresponding to the –3 dB cutoff of the filter. You can specify 4.0 or 10000.

Note This is not a complete list of NI-DAQmx properties and does not include every property you may need to configure your application. It is a representative sample of important properties to configure for measurements. For a complete list of NI-DAQmx properties and more information about NI-DAQmx properties, refer to your ADE help file.

Acquiring, Analyzing, and Presenting

After configuring the task and channels, you can start the acquisition, read measurements, analyze the data returned, and display it according to the needs of your application. Typical methods of analysis include digital filtering, averaging data, performing harmonic analysis, applying a custom scale, or adjusting measurements mathematically.

NI provides powerful analysis toolsets for each NI ADE to help you perform advanced analysis on the data without requiring you to have a programming background. After you acquire the data and perform any required analysis, it is useful to display the data in a graphical form or log it to a file. NI ADEs provide easy-to-use tools for graphical display, such as charts, graphs, slide controls, and gauge indicators. NI ADEs have tools that allow you to easily save the data to files such as spread sheets for easy viewing, ASCII files for universality, or binary files for smaller file sizes.

Completing the Application

After you have completed the measurement, analysis, and presentation of the data, it is important to stop and clear the task. This releases any memory used by the task and frees up the DAQ hardware for use in another task.

Note In LabVIEW, tasks are automatically cleared.

Developing an Application Using LabVIEW

This section describes in more detail the steps shown in the typical program flowchart in Figure 5-1, such as how to create a task in LabVIEW and configure the channels of the SCXI-1125. If you need more information or for further instructions, select **Help»VI, Function, & How-To Help** from the LabVIEW menu bar.

Note Except where otherwise stated, the VIs in Table 5-4 are located on the **Functions» All Functions»NI Measurements»DAQmx - Data Acquisition** subpalette and accompanying subpalettes in LabVIEW.

Table 5-4. Programming a Task in LabVIEW

Flowchart Step	VI or Program Step
Create Task in DAQ Assistant	Create a `DAQmx Task Name Constant` located on the **Controls»All Controls»I/O»DAQmx Name Controls** subpalette, right-click it, and select **New Task (DAQ Assistant)**.
Create a Task Programmatically (optional)	`DAQmx Create Task.vi`—This VI is optional if you created and configured your task using the DAQ Assistant. However, if you use it in LabVIEW, any changes you make to the task will not be saved to a task in MAX.
Create AI Channel (optional)	`DAQmx Create Virtual Channel.vi` (AI Voltage by default, to change to a channel, click **AI Voltage** and select the type of analog input you want.—This VI is optional if you created and configured your task and channels using the DAQ Assistant. Any channels created with this VI are not saved in the DAQ Assistant. They are only available for the present session of the task in LabVIEW.
Adjust Timing Settings (optional)	`DAQmx Timing.vi` (Sample Clock by default)—This VI is optional if you created and configured your task using the DAQ Assistant. Any timing settings modified with this VI are not saved in the DAQ Assistant. They are only available for the present session.
Configure Channels (optional)	DAQmx Channel Property Node, refer to the *Using a DAQmx Channel Property Node in LabVIEW* section for more information. This step is optional if you created and fully configured the channels using the DAQ Assistant. Any channel modifications made with a channel property node are not saved in the task in the DAQ Assistant. They are only available for the present session.
Start Measurement	`DAQmx Start Task.vi`
Read Measurement	`DAQmx Read.vi`
Analyze Data	Some examples of data analysis include filtering, scaling, harmonic analysis, or level checking. Some data analysis tools are located on the **Functions»Signal Analysis** subpalette and on the **Functions»All Functions»Analyze** subpalette.

Table 5-4. Programming a Task in LabVIEW (Continued)

Flowchart Step	VI or Program Step
Display Data	You can use graphical tools such as charts, gauges, and graphs to display your data. Some display tools are located on the **Controls»All Controls»Numeric»Numeric Indicators** subpalette and **Controls»All Controls»Graph** subpalette.
Continue Sampling	For continuous sampling, use a While Loop. If you are using hardware timing, you also need to set the `DAQmx Timing.vi` sample mode to Continuous Samples. To do this, right-click the terminal of the `DAQmx Timing.vi` labeled **sample mode** and click **Create»Constant**. Click the box that appears and select **Continuous Samples**.
Stop Measurement	`DAQmx Stop Task.vi` (This VI is optional, clearing the task automatically stops the task.)
Clear Task	`DAQmx Clear Task.vi`

Using a DAQmx Channel Property Node in LabVIEW

You can use property nodes in LabVIEW to manually configure the channels. To create a LabVIEW property node, complete the following steps:

1. Launch LabVIEW.
2. Create the property node in a new VI or in an existing VI.
3. Open the block diagram view.
4. From the **Functions** toolbox, select **All Functions» NI Measurements»DAQmx - Data Acquisition**, and select **DAQmx Channel Property Node**.
5. Use the **ActiveChans** box to specify exactly what channel(s) you want to configure. If you want to configure several channels with different properties, separate the lists of properties with another **ActiveChans** box and assign the appropriate channel to each list of properties.

Note If you do not use Active Channels, the properties are set on all of the channels in the task.

6. Right-click **ActiveChans**, and select **Add Element**. Left-click the new **ActiveChans** box. Navigate through the menus, and select the property you wish to define.

7. Change the property to read or write to either get the property or write a new value. Right-click the property, go to **Change To**, and select **Write**, **Read**, or **Default Value**.
8. After you have added the property to the property node, right-click the terminal to change the attributes of the property, add a control, constant, or indicator.

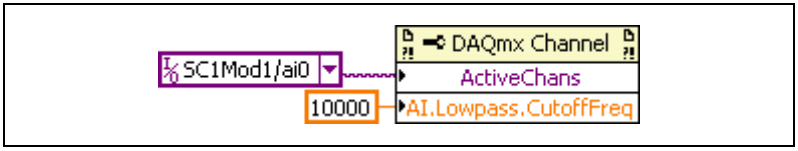

Figure 5-2. LabVIEW Channel Property Node with Lowpass Frequency Set at 10 kHz on Channel SC1Mod1/ai0

9. To add another property to the property node, right-click an existing property and left-click **Add Element**. To change the new property, left-click it and select the property you wish to define.

Note Refer to the *LabVIEW Help* for information about property nodes and specific NI-DAQmx properties.

Specifying Channel Strings in NI-DAQmx

Use the channel input of **DAQmx Create Channel** to specify the SCXI-1125 channels. The input control/constant has a pull-down menu showing all available external channels. The strings take one of the following forms:

- Single device identifier/channel number—for example `SC1Mod1/ch0`
- Multiple, noncontinuous channels—for example `SC1Mod1/ch0, SC1Mod1/ch4`
- Multiple continuous channels—for example `SC1Mod1/ch0:4` (channels 0 through 4)
- Cold junction channel—`SC1Mod1/_cjtemp`

When you have a task containing SCXI-1125 channels, you can set the properties of the channels programmatically using the **DAQmx Channel Property Node**.

Follow the general programming flowchart or open an example to build a basic virtual channel. You can use property nodes in LabVIEW to control, configure, and customize the NI-DAQmx task and SCXI-1125. To create a LabVIEW property node, complete the following steps:

1. Launch LabVIEW.
2. Create the property node in a new Virtual Instrument (VI) or in an existing VI.
3. Open the block diagram view.
4. From the **Functions** tool bar, select **NI Measurements**, **DAQmx - Data Acquisition**, and select the type of property node you wish to configure.
5. Use the **ActiveChans** box to specify the channel(s) you want to configure. If you want to configure several channels with different properties, separate the lists of properties with another **ActiveChans** box, and assign the appropriate channel to each list of properties.
6. Right-click **ActiveChan** and select **Add Element**. Left-click the new **ActiveChan** box. Navigate through the menus and select the property you wish to define.
7. You must change the property to read or write to either get the property or write a new value. Right-click the property, go to **Change To**, and select **Write**, **Read**, or **Default Value**.
8. After you have added the property to the property node, right-click the terminal to change the attributes of the property, add a control, constant, or indicator.
9. To add another property to the property node, right-click an existing property and left-click **Add Element**. To change the new property, left-click it and select the property you wish to define.

Note Refer to the *LabVIEW Help* for information about property nodes and specific NI-DAQmx properties.

Text Based ADEs

You can use text based ADEs such as LabWindows/CVI, Measurement Studio, Visual Basic, .NET, and C# to create code for using the SCXI-1125.

LabWindows/CVI

LabWindows/CVI works with the **DAQ Assistant** in MAX to generate code for a task. You can then use the appropriate function call to modify the task. To create a configurable channel or task in LabWindows/CVI, complete the following steps:

1. Launch LabWindows/CVI.
2. Open a new or existing project.
3. From the menu bar, select **Tools»Create/Edit DAQmx Tasks**.
4. Choose **Create New Task In MAX** or **Create New Task In Project** to load the DAQ Assistant.
5. Configure the NI-DAQmx task following the instructions in the *Creating a Voltage Global Channel or Task* section.
6. The DAQ Assistant creates the code for the task based on the parameters you define in MAX and the device defaults. To change a property of the channel programmatically, use the `DAQmxSetChanAttribute` function.

Note Refer to the *LabWindows/CVI Help* for more information about creating NI-DAQmx tasks in LabWindows/CVI and NI-DAQmx property information.

Measurement Studio (Visual Basic, .NET, and C#)

When creating a task in Visual Basic .NET and C#, follow the general programming flow in Figure 5-1. You can then use the appropriate function calls to modify the task. This example creates a new task and configures an NI-DAQmx channel on the SCXI-1125. You can use the same functions for Visual Basic .NET and C#.

Programmable NI-DAQmx Properties

All of the different ADEs that configure the SCXI-1125 access an underlying set of NI-DAQmx properties. Table 5-5 provides a list of some of the properties that configure the SCXI-1125. You can use this list to determine what kind of properties you need to set to configure the device for your application. For a complete list of NI-DAQmx properties, refer to your ADE help file.

Table 5-5. NI-DAQmx Properties

Property	Short Name	Description
Analog Input»General Properties» Advanced»Range»High	AI.Max	Specifies the upper limit of the input range.
Analog Input»General Properties» Advanced»Range»Low	AI.Min	Specifies the lower limit of the input range.
Analog Input»General Properties» Advanced»Gain and Offset» Gain Value	AI.Gain	Specifies a gain factor to apply to the signal conditioning portion of the channel.
Analog Input»Measurement Type	AI.MeasType	Indicates the measurement to take with the analog input channel.

Note This is *not* a complete list of NI-DAQmx properties and does not include every property you may need to configure your application. For a complete list of NI-DAQmx properties and more information about NI-DAQmx properties, refer to your ADE help file.

Developing Your Application in Traditional NI-DAQ (Legacy)

Note If you are not using an NI ADE, using an NI ADE prior to version 7.0, or are using an unlicensed copy of an NI ADE, additional dialog boxes from the NI License Manager appear allowing you to create a task or global channel in unlicensed mode. These messages continue to appear until you install version 7.0 or later of an NI ADE.

This section describes how to configure and use Traditional NI-DAQ (Legacy) to control the SCXI-1125 in LabVIEW, LabWindows/CVI, Measurement Studio, and other text-based ADEs. These NI ADEs provide greater flexibility and access to more settings than MAX, but you can use ADEs in conjunction with MAX to quickly create a customized application.

Traditional NI-DAQ (Legacy) in LabVIEW

LabVIEW is a graphical programming environment for test and measurement application development with built-in easy to use tools for data acquisition, analysis, and display. You can use functional graphical blocks called subVIs to easily create a custom application that fully utilizes the SCXI-1125 programmable functionality. Traditional NI-DAQ (Legacy) provides several standard data acquisition subVIs as well as subVIs specifically for use with the SCXI-1125.

For applications using Traditional NI-DAQ (Legacy) in LabVIEW, there are two typical methods of addressing SCXI-1125 channels—virtual channels (specifically virtual channels) and SCXI channel strings. Depending on the needs of your application, you choose one of these channel addressing methods to use in your LabVIEW application.

When you use virtual channels, the maximum number of channels per E Series DAQ device is 512 in multichassis systems. NI recommends using the virtual channel for ease of use. Refer to Appendix B, *Using SCXI Channel Strings with Traditional NI-DAQ (Legacy) 7.0 or Later*, for more information about how to create a virtual channel.

The SCXI channel string allows you to combine large numbers of channels into fewer scan list entries, to measure the signal voltage level directly for custom scaling, and to dynamically perform an offset null compensation in your application. NI recommends using SCXI channel strings for more advanced applications. In LabVIEW, an array of these channel strings configures multiple modules for scanning. When using SCXI channel strings, you can scan up to 3,072 channels in a multichassis system using a single E Series DAQ device.

Note You cannot mix virtual channels with the SCXI channel strings within the same channel string array.

To use virtual channels, enter the name of a virtual channel into the analog input channel string. If using multiple virtual channels, enter them in a different index in the channel string array, or separate them using a comma.

Since you can randomly scan analog input virtual channels, you can enter the virtual channels you want to scan in any order or repeatedly in a channel string array.

Typical Program Flow

After you have determined how you want to address the channels and whether you want to configure the SCXI-1125 in MAX or LabVIEW, you can design your application using a typical program flow such as the one shown in Figure 5-3.

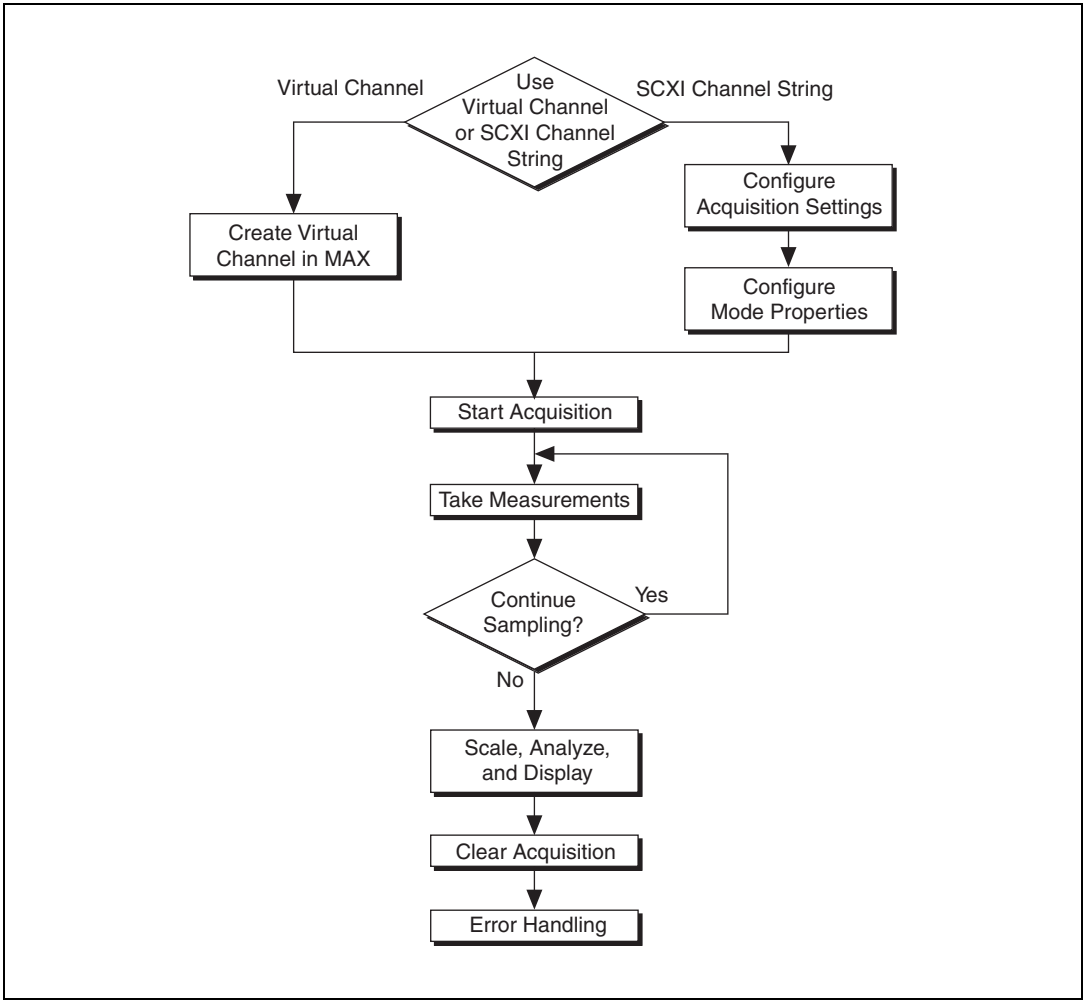

Figure 5-3. Typical SCXI-1125 Program Flow with Traditional NI-DAQ (Legacy)

Configure the SCXI-1125 Settings Using Traditional NI-DAQ (Legacy) in LabVIEW

You can configure SCXI-1125 settings in MAX using the virtual channel. To configure and control the SCXI-1125 from LabVIEW, use the AI Parameter VI. You can find AI Parameter VI in the function subpalette **Data Acquisition»Analog Input»Advanced Analog Input**.

A parameter changed by the AI Parameter VI takes effect in hardware when AI Start VI is called, not when AI Parameter VI is called. The AI parameter VI merely changes the configuration in the driver memory. When called, the AI Start VI reads the configuration settings in the driver memory and then sends the actual control information to the SCXI-1125 module. A setting established through AI Parameter VI is only valid for the LabVIEW session and does not change the setting in MAX.

You can use the AI Parameter VI to configure the SCXI-1125 settings shown in Table 5-6.

Table 5-6. Settings for Configuring the SCXI-1125 Through the AI Parameter

Software-Configurable Setting	AI Parameter VI		Allowable Settings (Float In, Boolean In, or Value In)	
	Parameter Name	Value	Data Type	Values
Filter Bandwidth	Filter Setting	14	Float In (dbl)	4.0, 10000.0

An example of using the AI Parameter VI to control an SCXI-1125 is shown in Figure 5-4.

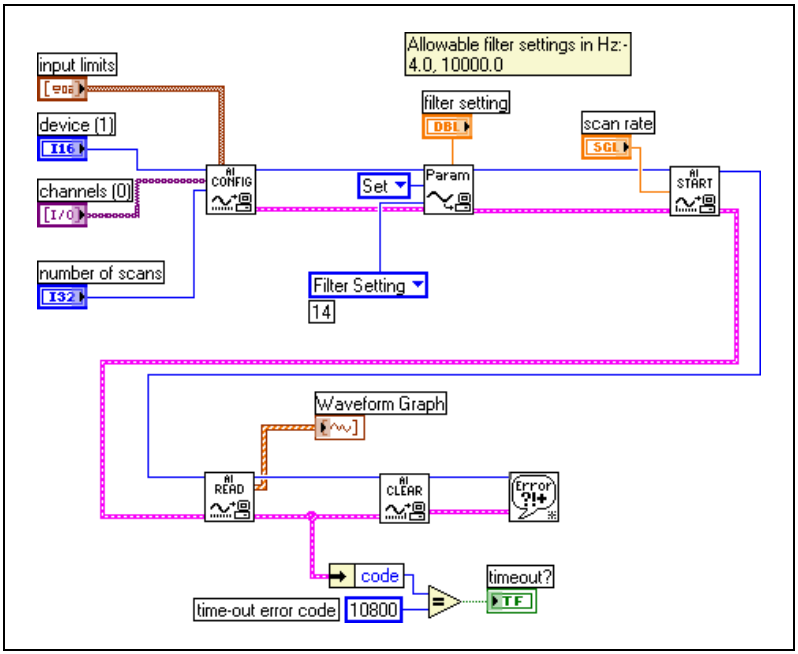

Figure 5-4. Using the AI Parameter VI to Set Up the SCXI-1125

Configure, Start Acquisition, and Take Readings Using Traditional NI-DAQ (Legacy) in LabVIEW

After you have performed an offset null compensation and configured the SCXI-1125 settings for your application, you can use the intermediate analog input functions AI Config VI, AI Start VI, AI Read VI, and AI Clear VI to create your data acquisition application. You can find the intermediate data acquisition Traditional NI-DAQ (Legacy) functions in the function subpalettes **Data Acquisition»Analog Input**. NI recommends using the intermediate analog input functions for most SCXI-1125 applications. For more information about using the intermediate data acquisition Traditional NI-DAQ (Legacy) functions, refer to the *LabVIEW Help*. You also can use the *LabVIEW Help* for more detailed information about the various inputs and outputs of these functions.

Convert Scaling Using Traditional NI-DAQ (Legacy) in LabVIEW

If you need scaling, you can either use an analog input voltage virtual channel with a custom scale configured in MAX or SCXI channel strings, and provide scaling in your LabVIEW application.

If you are using SCXI channel strings, you can easily convert the SCXI-1125 voltage signal measurements in your application into scaled units of interest such as pounds or newtons. LabVIEW has some common conversion scaling functions such as the Scaling Constant Tuner VI in the function subpalette **Data Acquisition»Signal Conditioning**.

You also can use an Expression Node or Formula Node to convert voltage signal measurements into whatever units your application requires. You can find an Expression Node in the function subpalette **Numeric**. You can find Formula Nodes in the **Function** subpalettes **Analyze»Mathematics» Formula**. For more information about using the Expression Node or Formula Node, refer to the *LabVIEW User Manual*. You also can use the *LabVIEW Help* for more detailed information about how to use these nodes to perform mathematical calculations such as scaling conversions.

Analyze and Display Using Traditional NI-DAQ (Legacy) in LabVIEW

In LabVIEW, you can easily analyze SCXI-1125 measurements with a variety of powerful analysis functions that you can find in the function subpalettes **Analyze»Waveform Conditioning** and **Analyze»Signal Processing**. You can perform post acquisition processing such as waveform comparisons, harmonic analysis, and digital filtering. For more information about these VIs, refer to the *LabVIEW Analysis Concepts* manual. You also can use the *LabVIEW Help* for more detailed information about how to use the analysis VIs.

In LabVIEW, you also can easily display SCXI-1125 measurements with a variety of graphical waveform graphs, numeric slides, gauges, and other indicators. You can find useful graphical controls and indicators for user interaction with your application in the controls subpalettes. For more information about these VIs, refer to the *LabVIEW User Manual*. You also can use the *LabVIEW Help* for more detailed information about how to use graphical controls and indicators in your application.

Traditional NI-DAQ (Legacy) in Text-Based ADEs

NI text-based ADEs, such as LabWindows/CVI, Measurement Studio for Microsoft Visual Basic, and Measurement Studio for Microsoft Visual C++, offer help in the development of test and measurement applications. These ADEs provide easy data acquisition, data analysis, graphical display, and data logging tools. Refer to the ADE user manual for more information about how to use these features.

The high-level data acquisition tools provided in LabWindows/CVI and Measurement Studio allow you to easily use virtual channels configured in MAX providing easy configuration and programming of the data acquisition systems. However, some of the more advanced features of the SCXI-1125 are not accessible through this easy-to-use API. For more advanced features or for more explicit control of the programmatic attributes, use the low-level DAQ functions provided in the Traditional NI-DAQ (Legacy) C API. Refer to the ADE user documentation for more information about how to use the high-level data acquisition tools that are provided in your NI ADE.

For more advanced SCXI-1125 applications, or if you are using an ADE other than an NI ADE, you can use the Traditional NI-DAQ (Legacy) C API to call functions from the DAQ driver dynamically linked library (dll).

Configuring System Settings Using Traditional NI-DAQ (Legacy) C API

Start the configuration of the acquisition by ensuring that the SCXI-1125 module and SCXI chassis are in their default states, and that the driver software configuration matches the states the actual physical hardware configuration. After setting the hardware and software to the defaults of the module(s), you can configure any module settings that vary from the default configuration settings. You also should configure the acquisition parameters using the functions in Table 5-7. For additional information such as the function prototypes, parameters, and usage instructions for each function, refer to the *Traditional NI-DAQ (Legacy) Function Reference Help* installed by default in **Start»All Programs»National Instruments» NI-DAQ**.

Table 5-7. Configuration Functions

Function	Description
`SCXI_Reset`	Resets the hardware such as the specified module to its default state. You also can use `SCXI_Reset` to reset the SCXI chassis Slot 0 scanning circuitry or reset the entire chassis. The SCXI-1125 default conditions are: • Gain set at 1000.0 • 4 Hz lowpass filter
`SCXI_Load_Config`	Loads the SCXI chassis configuration information you established in MAX. Sets the software states of the chassis and the modules present to their default states. This function makes no changes to the hardware state of the SCXI chassis or modules. It is possible to programmatically change the configuration you established in MAX using the `SCXI_Set_Config` function.
`SCXI_SCAN_Setup`	Initializes multiplexing circuitry for a scanned data acquisition operation. Initialization includes storing a table of the channel sequence and gain setting for each channel to be digitized (MIO and AI devices only). You *cannot* repeat channels or use nonsequential channels when using the `SCXI_SCAN_Setup` function.
`SCXI_MuxCtr_Setup`	Programs the E Series DAQ device with the correct number of channels multiplexed per scan. This number must match the total number of channels programmed in `SCXI_SCAN_Setup`.

Note NI strongly recommends monitoring the built-in error status of each NI-DAQ function. The NI-DAQ C API provides the `NIDAQErrorHandler` function, which ensures that a specified NI-DAQ function executed properly, and assists in handling error messages and reporting.

Configure Module Settings Using Traditional NI-DAQ (Legacy) C API

After configuring the hardware for acquisition, you must load the various channel attributes such as filter, gain, and excitation appropriate for your application explicitly using the NI-DAQ function calls shown in Table 5-8. For more information regarding each setting, refer to the *Traditional NI-DAQ (Legacy) Function Reference Help* installed by default in **Start»All Programs»National Instruments»NI-DAQ**.

Table 5-8. NI-DAQ Functions Used to Configure SCXI-1125

Channel Setting	NI-DAQ Function to Use	Significant Parameters	Possible Parameters Values
Gain	`SCXI_Set_Gain`	f64 gain (gain setting)	1, 2, 5, 10, 20, 50, 100, 200, 250, 500, 1000, 2000
Bandwidth	`SCXI_Configure_Filter`	f64 freq (filter cutoff frequency if filterMode = 1)	4.0, 10,000.0 Hz

Perform Offset Null Compensation Using Traditional NI-DAQ (Legacy) C API

After configuring the system settings and module properties, you can perform an offset null compensation programmatically using `SCXI_Calibrate`. `SCXI_Calibrate` takes measurements and adjusts the coarse and fine offset null potentiometers to minimize or eliminate any electrical offset for a channel. Repeat this process for each channel by calling the `SCXI_Calibrate` function in a loop. Use the resulting imbalance in your application as a software correction factor by determining the residual voltage from the imbalance, and subtracting this residual offset from each future measurement. For more information regarding the operation of `SCXI_Calibrate`, refer to the *Traditional NI-DAQ (Legacy) Function Reference Help* installed by default in **Start»Programs»National Instruments»NI-DAQ**.

Perform Acquisition Using Traditional NI-DAQ (Legacy) C API

There are several NI-DAQ functions you can use to take measurements. Usually in SCXI the preference is to take multiple samples from multiple channels using the `SCAN_Op` function. `SCAN_Op` performs a synchronous, multiple-channel scanned data acquisition operation. `SCAN_Op` does not return until Traditional NI-DAQ (Legacy) acquires all the data or an acquisition error occurs (MIO, AI, and DSA devices only). For this reason, it is sometimes useful to use `SCAN_Op` in conjunction with the function `Timeout_Config`, which establishes a timeout limit synchronous functions to ensure that these functions eventually return control to your application. After acquiring data using `SCAN_Op`, the resultant data is not organized by channel, so you should demultiplex the data using `SCAN_Demux`. `SCAN_Demux` rearranges, or demultiplexes, data acquired by a `SCAN_Op` into row-major order, meaning each row of the array holding

the data corresponds to a scanned channel for easier access by C applications. BASIC applications need not call `SCAN_Demux` to rearrange two-dimensional arrays since these arrays are accessed in column-major order. For more information regarding each acquisition function, refer to the *Traditional NI-DAQ (Legacy) Function Reference Help* installed by default in **Start»All Programs»National Instruments» NI-DAQ**.

Perform Scaling, Analysis, and Display

After acquiring raw voltage data from the acquisition functions, most applications require adjustment by device calibration constants for accuracy, scaling measured voltage, analysis, and graphical display.

The SCXI-1125 has stored software calibration constants loaded on the module EEPROM that are used to achieve the absolute accuracy specifications. `SCXI_Scale` scales an array of binary data acquired from an SCXI channel to voltage using the stored software calibration constants when it scales the data. You must call `SCAN_Demux` before `SCXI_Scale` if you have multiple channels in the scan. For more information regarding `SCXI_Scale`, refer to the *Traditional NI-DAQ (Legacy) Function Reference Help* installed by default in **Start»All Programs»National Instruments»NI-DAQ**.

After you have adjusted the measurement by the appropriate calibration constants using `SCXI_Scale`, you can use a function from the NI conversion library `convert.h` to convert a voltage or voltage buffer from a voltage to units of temperature or strain. NI-ADEs also provide many powerful analysis functions to perform digital filtering, harmonic analysis, averaging, and complex mathematics on measurements.

After performing scaling and analysis on the acquired data, you can display the measurements in several ways. You can use any built in GUI tools in your ADE. NI ADEs provide many graphical controls and indicators such as charts, graphs, gauges, slides, and plots that you can use to display the data. There is also a built in function, found in `nidaqex.h`, called `NIDAQPlotWaveform` that you can use to generate a simple plot of the data.

Using Software for Multiplexed Scanning

Performing scanning operations in software depends on the ADE you are using. While using LabVIEW, or Visual Basic, all scanning operations are prepared in software by using an SCXI *channel string* as the input to the channel parameter in the analog input VI or function. These ADEs also

support virtual channels using Data Neighborhood (DAQ Channel Wizard) in MAX. In LabWindows/CVI, C, or C++ development environments, several NI-DAQ function calls need to be made to set up each module involved in the scan, the chassis, and the E Series DAQ device controlling the scan. In Measurement Studio, SCXI channels must be configured as virtual channels (tags) in MAX.

A discussion describing how to implement multiplexed scanning in the different ADEs follows. Refer to your ADE manual and the DAQ analog input examples that come with your application software for more detailed information about programming the SCXI modules for scanning in multiplexed mode.

LabVIEW and the SCXI Channel String

For LabVIEW, and Visual Basic, the channel string determines the sequence in which SCXI channels are scanned. In LabVIEW, an array of these channel strings configures multiple modules in the scan list. When the application program runs, the channel string is used for programming the channel information into the SCXI system. The format of the channel string is as follows:

ob***x*** ! sc***y*** ! md***z*** ! ***channels***

where

- ob***x*** is the onboard E Series DAQ device channel, with *x* representing a particular channel where the multiplexed channels are sent. This value is 0 for DAQ channel 0 in a single-chassis system. In a multichassis or remote chassis system, however, the E Series DAQ device channel *x* corresponds to chassis number *n*–1, where DAQ device channel x is used for scanning the *n*th chassis in the system.
- sc***y*** is the SCXI chassis ID, where *y* is the number you chose when configuring your chassis.
- md***z*** is the slot position where the module is located, with *z* being the particular slot number. The slots in a chassis are numbered from left to right, starting with 1.

Note The ob*x* ! specifier is optional and causes the gains on the module and E Series DAQ device to be automatically set to fit the input limits parameter. When this specifier is omitted, the default gain on the E Series DAQ device, usually the lowest gain, is used, but the SCXI-1125 gain is adjusted to fit the input limits.

The last parameter, ***channels***, is the list of channels that are scanned for module *z*. It can have several formats:

- `ob`***x*** `! sc`***y*** `! md`***z*** `!` ***n***, where ***n*** is a single input channel.
- `ob`***x*** `! sc`***y*** `! md`***z*** `!` ***n1:n2***, where ***n1*** and ***n2*** represent a sequential list of input channels, inclusive.
- `ob`***x*** `! sc`***y*** `! md`***z*** `! cjtemp`, where `cjtemp` is the CJC channel. You can scan this channel with other analog input channels. For compatibility reasons, you can use `mtemp` in place of `cjtemp`.
- `ob`***x*** `! sc`***y*** `! md`***z*** `!` ***(n1, n2, n3:n4, n1, n5, n2)***, where ***n1***, ***n2***, and ***n5*** represent single channels, not necessarily sequential, and ***n3*** and ***n4*** represent the endpoints of a sequential list of channels, inclusive. In this case, channels ***n1*** and ***n2*** have explicitly been repeated in the channel list. This random scanning format is not supported on all SCXI modules.
- `ob`***x*** `! sc`***y*** `! md`***z*** `! calgnd` ***n1:n2*** where ***n1*** and ***n2*** represent a list of autozeroed channels, inclusive. In this case autozero channels cannot be scanned with input channels or the cold-junction channel, but must be scanned separately. This feature is useful for measuring offsets that appear due to temperature drifts in the analog circuitry. You can subtract these offsets from subsequent input readings to correct for temperature drift. Refer to Appendix A, *Specifications*, for determining how temperature drift can affect your measurement accuracy.

Note Repeating channels or having channels out of sequence in a scan list is not supported on all SCXI modules. Please refer to the manual of each module for information about this feature.

LabVIEW and the Virtual Channel String

For LabVIEW, Measurement Studio, and Visual Basic, the channel string can also contain virtual channels. For the SCXI-1125, these virtual channels are analog input channels you create that have custom names (*called tags* in Measurement Studio), that perform scaling, linearization, autozeroing, and CJC transparently without additional code. Virtual channels are useful when sensors requiring different scaling factors are used on the same SCXI-1125 channel. Using virtual channels, sensors needing special scaling can be used in a generic analog input application without performing hard-coded scaling or linearization. If the scaling changes or you want to connect a different sensor to the SCXI-1125, no changes are needed in the application. All that is required is creating a different virtual channel and using its name in the channel string.

Note You cannot mix virtual channels with the SCXI channel strings shown in the previous section.

To create a virtual channel for the SCXI-1125, insert a new analog input channel in the **Data Neighborhood** path in MAX, name it, and then follow the software prompts to create virtual temperature channels, voltage channels, or customized analog input channels. For more information about virtual channels, consult the MAX online help file.

To use the virtual channels, enter the name of the virtual channel into the analog input channel string. If using multiple virtual channels, separate them using a comma or enter them in a different index in the channel string array. The application does all scaling, linearization, autozeroing, and CJC automatically.

Note Virtual analog input channels can be randomly scanned; therefore, virtual channels can be entered in any order or repeated in the channel string.

Performing a Multiplexed Scan

To perform a multiplexed scan in your application, perform the following steps:

1. Open an analog input example in your ADE.
2. Enter the appropriate SCXI channel string or virtual channel string into the **channels** parameter.
3. Either enter the **input limits** for signals connected to the module to adjust the gain settings in your system, or use the default gain settings from the configuration utility, and then run the application. When using virtual channels, the default input limits configured in the virtual channel configurator are used.

You have completed a multiplexed scan using your SCXI-1125.

This is not a comprehensive discussion of SCXI scanning using LabVIEW or Measurement Studio, but it should give you enough information to help you get started with the examples that are shipped with these software packages.

C and Low-Level DAQ Functions

When using a C-based environment, several steps are needed to configure the SCXI-1125 for multiplexed scanning. The following procedure outlines the steps for programming with the low-level DAQ function calls:

1. Prepare the SCXI-1125 settings by either loading the original SCXI configuration settings using `SCXI_Load_Config`, or by specifying the gain and filter settings using `SCXI_Set_Gain` and `SCXI_Configure_Filter`.
2. Use `SCXI_SCAN_Setup` to specify the module scan list, the start channel of each module, and the number of channels to scan on each module. `SCXI_SCAN_Setup` accepts an array of start channels and an array of the number of channels to scan in each module. It is not possible to repeat channels or use nonsequential channels using `SCXI_SCAN_Setup`.
3. Next, use `SCXI_MuxCtr_Setup` to program the E Series DAQ device with the correct number of channels multiplexed per scan. This number must match the total number of channels programmed in step 2.

You are now ready to acquire the channel data with the E Series DAQ device. If you are using a multifunction E Series DAQ device, you can use `SCAN_OP` to perform the scanning operation. After scanning, convert the binary data to voltage data using `SCXI_Scale`. Refer to the *Traditional NI-DAQ User Manual* for additional information about scanning with DAQ devices.

Using Software for Parallel Scanning

Performing scanning operations in parallel mode requires no special channel strings or function calls for setting up channel sequencing as is required in multiplexed mode. Scanning the SCXI-1125 channels on a differentially configured DAQ device is done as if there were no SCXI-1125 module connected. The only requirement is that you must configure the module for parallel mode in MAX as described in Chapter 1, *About the SCXI-1125*.

LabVIEW and Parallel Mode

In LabVIEW, the SCXI-1125 configuration settings are automatically passed from MAX. LabVIEW can also set the SCXI-1125 configuration parameter, **operating mode**, to parallel or multiplexed programmatically by using the Set SCXI Information VI. In Measurement Studio, set the

operating mode using MAX as described in Chapter 1, *About the SCXI-1125*.

After parallel mode has been configured in software, you can scan the SCXI-1125 channels by entering the corresponding E Series DAQ device channels or a sequential SCXI channel string in the **channel** parameter in the analog input application. You can also enter virtual channels; however, in parallel mode, virtual channels containing CJC are disabled in MAX.

C and Parallel Mode

When using a C-based ADE, you need no special steps for configuring the chassis, the SCXI-1125, or the E Series DAQ device for parallel scanning. You still have to configure the gain and filter settings by using `SCXI_Set_Gain` and `SCXI_Configure_Filter`. You can use any of the E Series DAQ device analog input functions to get the data from the eight channels of the SCXI module. After scanning, convert the binary data to voltage data by using `SCXI_Scale`. Refer to the *Traditional NI-DAQ User Manual* for additional information about parallel scanning of SCXI modules.

Other Application Documentation and Material

Refer to the ADE manual and the DAQ analog input examples that come with your application software for more detailed information about programming the SCXI modules for scanning in multiplexed mode.

Traditional NI-DAQ (Legacy) CVI Examples

Many example programs ship with NI-DAQ. For more example information about how to create tasks and channels, refer to the example programs. By default, the example programs are installed in `C:\Program Files\National Instruments\CVI x.x\Samples`. More examples are installed by default in `C:\Program Files\National Instruments\NI-DAQ\Examples`.

Traditional NI-DAQ (Legacy) Measurement Studio Examples

Many example programs ship with NI-DAQ. For more example information about how to create tasks and channels, refer to the example programs. By default, the example programs are installed in `C:\Program Files\National Instruments\Measurement Studio 7.0`. More examples are installed by default in `C:\Program Files\National Instruments\NI-DAQ\Examples`.

Calibration

The SCXI-1125 is shipped with a calibration certificate and is calibrated by the factory to the specifications described in Appendix A, *Specifications*. Calibration constants are stored inside the calibration EEPROM and provide software correction values that are used by your application development software to correct your measurements for both offset and gain errors in the module.

Due to the nature of the analog circuitry in your SCXI-1125 module, gain errors tend to be more stable over time, therefore requiring less frequent calibration. Offset errors, however, are more susceptible to drift due to time, temperature, and other environmental changes, and can affect the measurement accuracy of your module. You may wish to periodically calibrate the module for offset drift using the following procedure to ensure that the measurements on the SCXI-1125 are as accurate as possible. Refer to Appendix A, *Specifications*, for more details about the analog stability of your SCXI-1125 module.

Calibration Procedures

You can calibrate the offset on the SCXI-1125 using National Instruments software. When calibrating the offset on the SCXI-1125, make sure the DAQ device you are using has been calibrated recently or you will invalidate the offset calibration on the SCXI-1125. The SCXI-1125 provides input switching that allows you to programmatically shunt the differential input channels of the SCXI-1125. Once the channels are shunted, the channel can be read by a calibrated DAQ device or calibrated DMM. These offsets voltages, read by the calibrated device, can be saved in the calibration EEPROM in the SCXI-1125 for software correction of offset.

Caution Ensure that the calibration on the DAQ device or DMM you are using is up to date and traceable. If you adjust the gain or offset values using an uncalibrated device, you will invalidate the calibration on the SCXI-1125 and any measurements taken with the module may not be accurate.

Remember that the calibration you perform on the SCXI-1125 is only as accurate as the calibration device you are using. Refer to Appendix A, *Specifications*, for accuracy specifications for the SCXI-1125.

One-Point Offset Calibration

To perform offset calibration on your module, follow this procedure if you are using LabVIEW:

1. Make sure the DAQ device or DMM you are using has a valid calibration and meets the accuracy specifications for your application.
2. In LabVIEW, use the SCXI Calibrate VI to calibrate your module.
   a. Enter the DAQ device and the SCXI channel string for the channels you want to calibrate.You can calibrate only one channel at a time.
   b. Select **internal calibration** as the calibration operation you are going to perform.
   c. Select the **Default EEPROM load area** as the area you want to update.
   d. The offset varies with the selected gain value. Therefore, enter the high and low limits that correspond to the gain value for which you are calibrating offset. Refer to Table 5-9 for a list of the gain values and the corresponding input limits you must enter.
   e. Enter 0.0 as the input reference voltage.
3. Run the application.
4. Repeat steps 2 through 3 for calibrating the offset for additional channels or gain combinations.

Table 5-9. Gain Values and Input Limits

Gain	Range (V)
1	±5
2	±2.5
5	±1
10	±0.5
20	±0.25
50	±0.125
100	±0.05
200	±0.025
250	±0.020
500	±0.010

Table 5-9. Gain Values and Input Limits (Continued)

Gain	Range (V)
1000	±0.005
2000	±0.0025

If you are using a C-based ADE, use the following procedure to do an offset calibration on the SCXI-1125:

1. Make sure the DAQ device or DMM you are using has a valid calibration and meets the accuracy specifications for your application.
2. Use the NI-DAQ function `SCXI_Calibrate` to calibrate one channel of the SCXI-1125.
   a. Enter the DAQ device, DAQ channel, module slot, and module channel for the channel you want to calibrate.
   b. Select **internal calibration (0)** as the operation you are going to perform.
   c. Select the **load area (1)** as the EEPROM area you want to update.
   d. Since offset varies with gain, enter the gain setting for which you are calibrating offset.
   e. Enter `1` for the terminal block gain since it is not used.
   f. Enter `0.0` as the input reference voltage.
3. Repeat step 2 for calibrating additional channels.

The SCXI-1125 may take a few seconds to perform the calibration. After completion, your module will have new calibration constants stored for the channels and gains you calibrated.

Two-Point Gain and Offset Calibration

If you also need to calibrate the gain constants on the SCXI-1125, you must use an external reference to perform a two-point calibration. Refer to the *SCXI-1125 Calibration Procedure* document for more information about doing an external two-point gain and offset calibration.

A

Specifications

This appendix lists the specifications for the SCXI-1125 modules. These specifications are typical at 25 °C unless otherwise noted.

Input Characteristics

Table A-1. Input Signal Range Versus Gain

Overall Gain	Overall Voltage Range	SCXI-1125 Gain
1	±5 V_{peak} or VDC	1
2	±2.5 V_{peak} or VDC	2
5	±1 V_{peak} or VDC	5
10	±500 mV_{peak} or VDC	10
20	±250 mV_{peak} or VDC	20
50	±100 mV_{peak} or VDC	50
100	±50 mV_{peak} or VDC	100
200	±25 mV_{peak} or VDC	200
250	±20 mV_{peak} or VDC	250
500	±10 mV_{peak} or VDC	500
1000	±5 mV_{peak} or VDC	1000
2000	±2.5 mV_{peak} or VDC	2000

Note Refer to Tables 5-1 and 5-2 for extended range using the SCXI-1313A, SCXI-1327, and TBX-1316.

Overvoltage protection

Isolated connector pins:
Powered on and off.....±300 V

Inputs protected .....CH0..CH7

Non-isolated connector pins:
Powered on and off.....+5.5V/–0.5 V

Absolute Accuracy

Nominal Range (V)	Overall Gain	Residual Gain Error[1] (ppm of Reading)	Gain Tempco (ppm of Reading/°C)	Residual Offset Error[2] (ppm of Range)	Offset Time Drift[3] (ppm of Range/month)	Offset Tempco (ppm of Range/°C)	Noise, 3σ[4] (mV_{pk}) Single Point		Absolute Accuracy at Full Scale (mV)[5]
							4 Hz	10 kHz	
±1000[6]	0.005	11200	20	200	3100	54	115	1620	156645
±250[7]	0.02	5500	28	200	3100	55	30	478	2527
±100[7]	0.05	5500	30	200	3100	58	12	183	1013.8
±50[7]	0.1	5500	30	200	3100	58	6	111	511.8
±25[7]	0.2	5500	32	200	3100	63	3	48	255.8
±10[7]	0.5	5500	35	200	3100	77	1	19.1	104.0
±5	1	5000	10	200	3100	54	0.53	8.6	46.85
±2.5	2	5000	13	200	3100	55	0.254	4.3	23.53
±1	5	5000	15	200	3100	58	0.110	1.7	9.46
±0.5	10	5000	15	200	3100	58	0.069	0.882	4.74
±0.25	20	5000	15	200	3100	63	0.032	0.474	2.39
±0.1	50	5000	15	200	3100	77	0.011	0.180	0.967
±0.05	100	5000	15	200	3100	100	0.0062	0.0882	0.495
±0.025	200	5000	20	200	3100	148	0.0026	0.0479	0.262
±0.02	250	5000	20	200	3100	173	0.0023	0.0371	0.214
±0.01	500	5000	20	200	3200	291	0.0013	0.0218	0.121
±0.005	1000	5000	20	200	3200	529	0.00072	0.0149	0.074

Nominal Range (V)	Overall Gain	Residual Gain Error[1] (ppm of Reading)	Gain Tempco (ppm of Reading/°C)	Residual Offset Error[2] (ppm of Range)	Offset Time Drift[3] (ppm of Range/month)	Offset Tempco (ppm of Range/°C)	Noise, 3σ[4] (mV_{pk}) Single Point 4 Hz	Noise, 3σ[4] (mV_{pk}) Single Point 10 kHz	Absolute Accuracy at Full Scale (mV)[5]
±0.0025	2000	5000	20	200	3300	1005	0.00042	0.0112	0.050

[1] The residual gain error assumes 25 °C ambient temperature and 1 year drift after external calibration.

[2] The residual offset error assumes 25 °C ambient temperature.

[3] The offset time drift coefficients can be scaled by the square root of the time ratio. For example, on the ±5 V range, the offset time drift of 1 day and 1 year can be calculated using the offset time drift of 1 month:

$$\text{Offset1DayDrift} = \frac{\text{Offset1MonthDrift}}{\sqrt{30}} \qquad \text{Offset1DayDrift} = 566 \text{ ppm}$$

$$\text{Offset1YearDrift} = \text{Offset1MonthDrift} \times \sqrt{12} \qquad \text{Offset1YearDrift} = 10739 \text{ ppm}$$

[4] Using a PXI-6030E with the SH68-68-EP cable (1 m).

[5] AbsoluteAccuracy = Reading × (GainError) + Range × (OffsetError) + NoiseUncertainty
GainError = ResidualGainError + GainTempco × (TempChangeFromLastExternalCal)
OffsetError = ResidualOffsetError + OffsetTimeDrift × (TimeAfterSelfCalibration) + OffsetTempco × (TempChangeFromLastInternalCal)

$$\text{NoiseUncertainty} = \frac{\text{Noise}}{\sqrt{\text{NumberOfAverages}}}$$

Absolute accuracy at full scale is determined using the following assumptions:
Temperature Range: 15 °C to 35 °C
NumberOfAverages = 16
TimeAfterSelfCalibration = 1 month

For example, on the ±5 V range, the absolute accuracy at full scale is as follows:
GainError = 5000 ppm + 10 ppm × 10 GainError = 5100 ppm
OffsetError = 200 ppm + 3100 ppm × 1 + 54 ppm × 10 OffsetError = 3840 ppm

$$\text{NoiseUncertainty} = \frac{8600\ \mu\text{V}}{\sqrt{16}} \qquad \text{NoiseUncertainty} = 2150\ \mu\text{V}$$

AbsoluteAccuracy = 5 V × (GainError) + 5 V × (OffsetError) + NoiseUncertainty AbsoluteAccuracy = 46.85 mV

[6] With the TBX-1316 high-voltage terminal block.

[7] With the SCXI-1327 high-voltage terminal block.

Analog Inputs

Number of input channels ..... 8 differential

Input range ..... ±2.5 mVDC to ±5 VDC

Input coupling ..... DC (or AC with SCXI-1305 or TBX-1329)

Input impedance

- Normal powered on ..... >1 G || 100 pF in parallel
- Powered off/overload..... 4.5 M
- With SCXI-1327 ..... 1 M
- With TBX-1316 ..... 40 M

Input bias current ..... ±100 pA typical, ±1 nA max

Filter type ..... 3-pole Butterworth filter response

Bandwidth

- Filter options ..... 4 Hz and 10 kHz
- 10 kHz filter
  - Full power bandwidth ..... 7 kHz
  - With SCXI-1327 or SCXI-1313A high-voltage terminal blocks ..... 2.6 kHz
  - With TBX-1316 high-voltage terminal block ..... 500 Hz

Slew rate

- Typical.....0.15 V/µs
- Minimum.....0.1 V/µs

Scan interval accuracy[1]

- ±0.5% ..... 3 µs
- ±0.187% ..... 10 µs
- ±0.006% ..... 28 µs
- ±0.0015% ..... 32 µs

[1] Using a PXI-6251 with the SHC68-68-EPM cable (1 m).

Common mode rejection ratio, 50/60 Hz (CMRR)
4 Hz filter enabled .....160 dB
10kHz filter enabled .....98 dB

Normal mode rejection, 50/60 Hz (NMRR)
4 Hz filter enabled .....60 dB

Crosstalk at 1kHz
Adjacent channels.....–75 dB
All other channels.....–90 dB

Input coupling
Default .....DC
Using SCXI-1305 or TBX-1329 .....AC or DC

Power Consumption

+18.5 V .....140 mA max

–18.5 V .....140 mA max

+5 V .....10 mA max

Output Characteristics

Output range .....±5.0 V

Output impedance
Multiplexed output mode .....100 Ω
Parallel output mode.....330 Ω

Transfer Characteristics

Nonlinearity
All ranges.....0.02% of full scale range

Stability

Recommended warm-up time.....15 minutes

Offset drift .....± (0.42 + 250/gain) µV/°C

Gain drift.....±20 ppm/°C typical

Calibration

External calibration interval..... 1 year

Physical

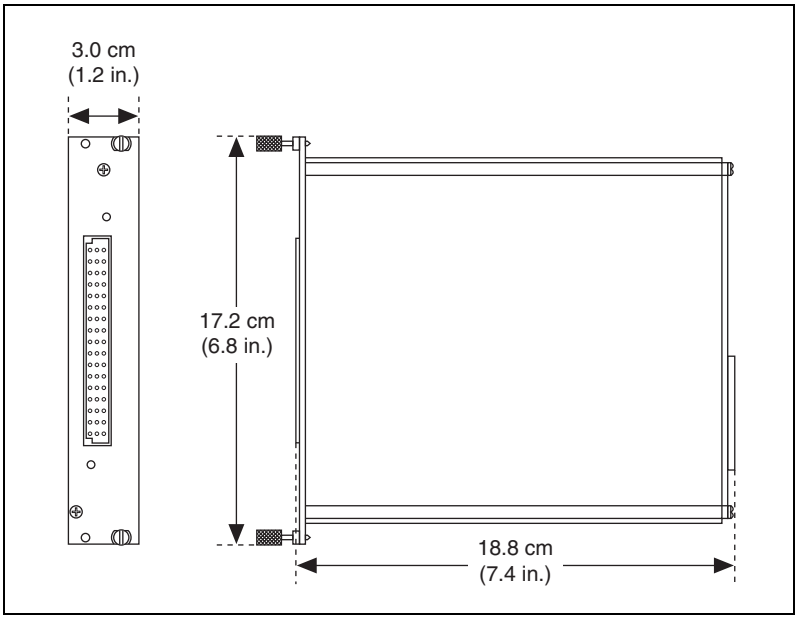

Figure A-1. SCXI-1125 Dimensions

Weight..... 641 g (22.6 oz)

Maximum Working Voltage

Maximum voltage rating refers to the signal voltage plus the common mode voltage (Signal + common mode). Voltage of each input shall remain within 300 V of ground.

Channel-to-earth .....300 V, Measurement Category II

Channel-to-channel.....300 V, Measurement Category II

Table A-2. Terminal Block Maximum Voltages

Module	Signal Range	Maximum Voltage and Category [Insulation]
SCXI-1313A	150 V	150 V, Measurement Category II [channel-to-channel, channel-to-earth]
SCXI-1327	300 V	300 V, Measurement Category II [bank-to-bank, bank-to-earth]
TBX-1316	600 V	600 V, Measurement Category II [Basic; channel-to-channel]
	1000 V	1000 V, Measurement Category I [Basic; channel-to-channel]

Caution The SCXI-1125 is rated for Measurement Category II and is intended to carry signal voltages no greater than 300 V. Do *not* use the SCXI-1125 for connection to signals or for measurements within Categories III or IV.

When hazardous voltages (>42.4 V_{pk}/60 VDC) are present on any channel, all channels are considered hazardous. Ensure that external wiring or any circuits connected to the device are properly insulated from human contact.

Environmental

Operating temperature .....0 to 50 °C

Storage temperature.....–20 to 70 °C

Humidity .....10 to 90% RH, noncondensing

Maximum altitude.....2,000 meters

Pollution Degree (indoor use only) 2

Safety

This product meets the requirements of the following standards of safety for electrical equipment for measurement, control, and laboratory use:

- IEC 61010-1, EN 61010-1
- UL 61010-1, CSA 61010-1

Note For UL and other safety certifications, refer to the product label or the *Online Product Certification* section.

Electromagnetic Compatibility

This product meets the requirements of the following EMC standards for electrical equipment for measurement, control, and laboratory use:

- EN 61326 (IEC 61326): Class A emissions; Basic immunity
- EN 55011 (CISPR 11): Group 1, Class A emissions
- AS/NZS CISPR 11: Group 1, Class A emissions
- FCC 47 CFR Part 15B: Class A emissions
- ICES-001: Class A emissions

Note For the standards applied to assess the EMC of this product, refer to the *Online Product Certification* section.

Note For EMC compliance, operate this device with shielded cables.

CE Compliance CE

This product meets the essential requirements of applicable European Directives as follows:

- 2006/95/EC; Low-Voltage Directive (safety)
- 2004/108/EC; Electromagnetic Compatibility Directive (EMC)

Online Product Certification

Refer to the product Declaration of Conformity (DoC) for additional regulatory compliance information. To obtain product certifications and the DoC for this product, visit `ni.com/certification`, search by model number or product line, and click the appropriate link in the Certification column.

Environmental Management

NI is committed to designing and manufacturing products in an environmentally responsible manner. NI recognizes that eliminating certain hazardous substances from our products is beneficial to the environment and to NI customers.

For additional environmental information, refer to the *NI and the Environment* Web page at `ni.com/environment`. This page contains the environmental regulations and directives with which NI complies, as well as other environmental information not included in this document.

Waste Electrical and Electronic Equipment (WEEE)

EU Customers At the end of the product life cycle, all products *must* be sent to a WEEE recycling center. For more information about WEEE recycling centers, National Instruments WEEE initiatives, and compliance with WEEE Directive 2002/96/EC on Waste Electrical and Electronic Equipment, visit `ni.com/environment/weee`.

电子信息产品污染控制管理办法 （中国 RoHS）

中国客户 National Instruments 符合中国电子信息产品中限制使用某些有害物质指令 (RoHS)。关于 National Instruments 中国 RoHS 合规性信息，请登录 `ni.com/environment/rohs_china`。(For information about China RoHS compliance, go to `ni.com/environment/rohs_china`.)

B

Using SCXI Channel Strings with Traditional NI-DAQ (Legacy) 7.0 or Later

Note This appendix is not applicable if you use the virtual channels to configure and measure the SCXI channels. Virtual channels are configured using MAX. If you use virtual channels, you address the SCXI channels by specifying the channel name(s) in the channel string input.

When using LabVIEW, and Visual Basic, the SCXI channel string determines which SCXI channels are scanned and the scanning sequence. The SCXI channel string allows you to take measurements from several channels on one module with only one channel string entry. An array of these channel string entries configures multiple modules for scanning. When the application program runs, the channel string is used for programming the channel information into the SCXI system.

The format of the channel string is as follows:

`obx ! scy ! mdz ! channels`

where

- `obx` is the onboard E Series DAQ device channel, with *x* representing a particular channel where the multiplexed channels are sent. This value is 0 for E Series DAQ device channel 0 in a single-chassis system. In a multichassis or remote chassis system, the E Series DAQ device channel *x* corresponds to chassis number $n - 1$, where E Series DAQ device channel *x* is used for scanning the *n*th chassis in the system.
- `scy` is the SCXI chassis ID, where *y* is the number you chose when configuring the chassis.
- `mdz` is the slot position where the module is located, with *z* being the particular slot number. The slots in a chassis are numbered from left to right starting with 1.

`channels` is the list of channels that are scanned for module `z`. It can have several formats:

- `obx ! scy ! mdz ! nx`, where `nx` is a single input channel.
- `obx ! scy ! mdz ! (n0, n2)`, where `n0, n2` are individual input channel that are not necessarily sequential.
- `obx ! scy ! mdz ! n0:n3`, where `n0` and `n3` represent an ascending sequential list of input channels, inclusive.
- `obx ! scy ! mdz ! (n0, n2, n3:n4, n1, n5, n2)`, where `n0`, `n2`, and `n5` represent single channels, not necessarily sequential, and `n3` and `n4` represent the endpoints of an ascending sequential list of channels, inclusive. In this case, channels `n1` and `n2` are explicitly repeated in the channel list.

Notes Using parenthesis surrounding multiple channels in a channel string is important for correct scanning operation of the SCXI channels.

In a single-chassis system, the `obx !` specifier is optional and causes the gains on the module and E Series DAQ device to be automatically set to fit the input limits parameter. When this specifier is omitted, the default gain on the E Series DAQ device, usually the lowest gain, is used, but the SCXI-1125 gain is adjusted to fit the input limits.
NI recommends using the `obx !` specifier.

Repeating channels or having channels out of sequence in a scan list is not supported on all SCXI modules. Refer to the manual of each module for information about this feature, which is referred to as flexible scanning or random scanning.

For more information about using SCXI channel string, refer to the *LabVIEW Help* and SCXI-1125 shipping examples.

C

Removing the SCXI-1125

This appendix explains how to remove the SCXI-1125 from MAX and an SCXI chassis.

Note Figure C-1 shows an SCXI chassis, but the same steps are applicable to a PXI/SCXI combination chassis.

Removing the SCXI-1125 from MAX

To remove a module from MAX, complete the following steps after launching MAX:

1. Expand **Devices and Interfaces** to display the list of installed devices and interfaces.
2. Expand **NI-DAQmx Devices** and/or **Traditional NI-DAQ Devices** to display the chassis.
3. Expand the appropriate chassis to display the installed modules.
4. Right-click the module or chassis you want to delete and click **Delete**.
5. You are presented with a confirmation window. Click **Yes** to continue deleting the module or chassis or **No** to cancel this action.

Note Deleting the SCXI chassis deletes all modules in the chassis. All configuration information for these modules is also deleted.

The SCXI chassis and/or SCXI module(s) should now be removed from the list of installed devices in MAX.

Removing the SCXI-1125 from a Chassis

Consult the documentation for the chassis and accessories for additional instructions and precautions. To remove the SCXI-1125 module from a chassis, complete the following steps while referring to Figure C-1:

1. Power off the chassis. Do *not* remove the SCXI-1125 module from a chassis that is powered on.

2. If the SCXI-1125 is the module cabled to the E/M/X Series DAQ device, disconnect the cable.
3. Remove any terminal block that connects to the SCXI-1125.
4. Rotate the thumbscrews that secure the SCXI-1125 to the chassis counterclockwise until they are loose, but do not completely remove the thumbscrews.
5. Remove the SCXI-1125 by pulling steadily on both thumbscrews until the module slides completely out.

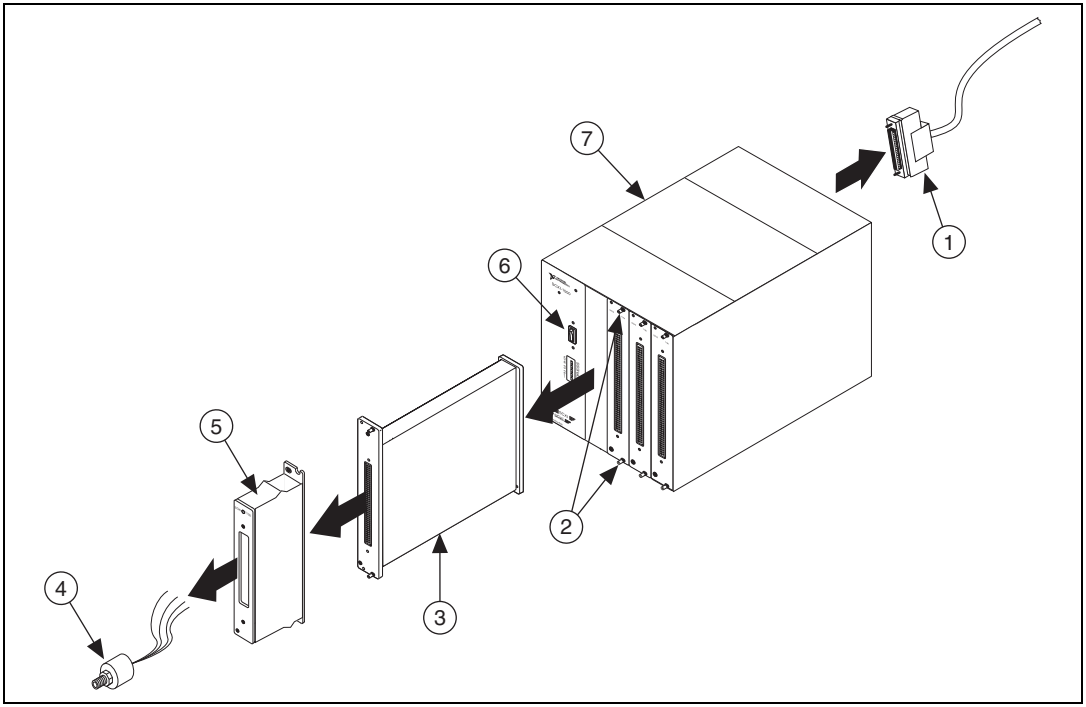

1	Cable	5	Terminal Block
2	SCXI Module Thumbscrews	6	SCXI Chassis Power Switch
3	SCXI-1125	7	SCXI Chassis
4	Sensor		

Figure C-1. Removing the SCXI-1125

D

Common Questions

This appendix lists common questions related to the use of the SCXI-1125.

The SCXI-1125 is backward compatible with the SCXI-1120, but what are the major differences between the SCXI-1120 and the SCXI-1125?

Table D-1 compares the major specifications and features of the two modules. Other specifications and features of the SCXI-1125 are the same or very similar to the SCXI-1120.

Table D-1. Comparison of the SCXI-1125 with the SCXI-1120

Feature	SCXI-1120	SCXI-1125
Analog input	8	8
Input range	±5 V, ±250 V with SCXI-1327	±5 V, ±300 V with SCXI-1327, ±1000 VDC with TBX-1316
Isolation	250 V_{rms}	300 V_{rms}
Gains	1, 2, 5, 10, 20, 50, 100, 200, 250, 500, 1000, and 2000 jumper selectable	1, 2, 5, 10, 20, 50, 100, 200, 250, 500, 1000, and 2000 software selectable
Filters	4 Hz or 10 kHz jumper selectable	4 Hz or 10 kHz software selectable
Autozero	Not supported	Software configurable and scannable
Calibration	Manually rotateable potentiometers for one-point offset calibration	Software internal one-point offset calibration, software external two-point offset and gain calibration, and onboard calibration constant storage in EEPROM
Scanning	333 kS/s with consecutive channels	333 kS/s with nonconsecutive and repeating channels (random scanning)
CJC scanning	M TEMP (non-scannable) or D TEMP (direct channel)	M TEMP, CJ TEMP (scannable)
Offset error	±6 µV ± 3 mV/gain	0.2 mV/gain typical
Gain error	±0.2% typ, ±0.6% max	±0.03% typ, ±0.08% max

Which version of NI-DAQ is needed to work with the SCXI-1125 and how do I get the most current version of NI-DAQ?

You must have NI-DAQmx 9.0 or later. Visit `ni.com` and follow the link, **Download Software»Drivers and Updates»Search Drivers and Updates**, and type in the keyword `NI-DAQ` to find the latest version of NI-DAQ for your operating system.

I have gone over the *Verifying the SCXI-1125 Installation in Software* in Chapter 1, *About the SCXI-1125*, yet I still cannot correctly test and verify that my SCXI-1125 is working. What should I do now?

Unfortunately, there always exists the chance that something is not operating correctly in your system, or the combination of the components in your system is not operating correctly together. You may now have to contact an NI technical support representative. Refer to the *Technical Support Information* document for more information.

The technical support representative will often suggest additional troubleshooting measures to try in order to isolate the problem. If requesting technical support by phone, have your system near at hand so that you can try these measures immediately.

Can I use the unused analog input channels of the E/M/X Series DAQ device if I am directly cabled to the SCXI-1125?

It depends. The SCXI-1125 always outputs channels 1 through 7 to the rear signal connector to permit parallel mode scanning. If you are using a 16-channel (8 differential inputs) E/M/X Series DAQ device, all E/M/X Series DAQ channels are unusable for general-purpose analog input. If you have a module in the chassis that does not have parallel mode, connect the E/M/X Series DAQ device to it and use a breakout connector to connect to the unused channels on the E/M/X Series DAQ device. If you are directly connected to a higher input channel device, such as a 64-channel (32 differential inputs) E/M/X Series DAQ device, only the lower eight differential inputs are unusable.

Which digital lines are unavailable on the E/M/X Series DAQ device if I am cabled to an SCXI-1125 module?

Table D-2 shows the digital lines that are used by the SCXI-1125 for communication and scanning. These lines are unavailable for general-purpose digital I/O if the SCXI-1125 is connected to the E/M/X Series DAQ device.

Table D-2. Digital Signals on the SCXI-1125

Traditional DAQ Signal Name	DAQmx Signal Name	SCXI Signal Name	50-Pin Connector	68-Pin Connector	Direction
DIO0	P0.0	SER DAT IN	25	52	Output
DIO4	P0.4	SER DAT OUT	26	19	Input
DIO1	P0.1	DAQ D*/A	27	17	Output
DIO2	P0.2	SLOT 0 SEL*	29	49	Output
SCANCLK	AI HOLD COMP, AI HOLD	SCAN CLK	36	46	Output
EXTSROBE*	EXTSROBE	SER CLK	37	45	Output
STARTSCAN	AI SAMP CLK, AI SAMP	SYNC*	46	38	Output

In LabVIEW, can I use different input limits for the same SCXI-1125 channel if I repeat the channel in the SCXI channel string array?

No, the SCXI-1125 cannot dynamically change the gain settings during scanning. Therefore, channels with similar input ranges should be grouped together in the channel string array. Make sure that repeated channels in different indices of the channel string array have the same input limits in the corresponding input limits array.

In LabVIEW, can I use virtual channels with parallel mode channels on the SCXI-1125?

Yes, virtual channels work with parallel mode operation on the SCXI-1125. The E/M/X Series DAQ device must be directly connected to the module in parallel mode operation. Also, virtual channels that use built-in CJC are disabled and cannot be used in parallel mode.

In LabVIEW, can I use the calgnd channel string when the SCXI-1125 is in parallel mode?

Yes, you can autozero the SCXI-1125 in LabVIEW when using the module in parallel mode.

In LabVIEW, can I use a VI to change my filter setting?

In NI-DAQmx, you can change the filter settings using a DAQmx Channel property node. In Traditional NI-DAQ (Legacy), there is no VI available to do this. You must use the configuration utility in MAX to configure the filter setting of each channel.

In C, can I randomly scan the SCXI-1125 using low level Traditional NI-DAQ (Legacy) function calls?

No, using C, you can scan only consecutive channels using traditional SCXI channel programming. Refer to the NI-DAQ function reference manual for more details on SCXI scanning.

Glossary

Symbol	Prefix	Value
p	pico	10^{-12}
n	nano	10^{-9}
μ	micro	10^{-6}
m	milli	10^{-3}
k	kilo	10^{3}
M	mega	10^{6}
G	giga	10^{9}
T	tera	10^{12}

Numbers/Symbols

°	Degrees
≥	Greater than or equal to
≤	Less than or equal to
Ω	Ohms
/	Per
%	Percent
±	Plus or minus
+5 V (signal)	+5 VDC source signal

A

A/D	analog-to-digital
absolute accuracy	The maximum difference between the measured value from a data acquisition device and the true voltage applied to the input, typically specified as ± voltage.
AC	alternating current
ADC	analog-to-digital converter—An electronic device, often an integrated circuit, that converts an analog voltage to a digital number.
ADE	application development environment—A software environment incorporating the development, debug, and analysis tools for software development.
AI GND	analog input ground
AI HOLD COMP, AI HOLD	clock that triggers scanning
amplification	A type of signal conditioning that improves accuracy in the resulting digitized signal by increasing signal amplitude relative to noise.
autozero	A procedure for eliminating offsets generated by an amplifier stage.

B

bandwidth	The range of frequencies present in a signal, or the range of frequencies to which a measuring device can respond.
bias current	The small input current flowing into or out of the input terminals of an amplifier.
bit	one binary digit, either 0 or 1
BNC	Bayonet-Neill-Concelman—A type of coaxial connector used in situations requiring shielded cable for signal connections and/or controlled impedance applications.

C

C	Celsius
CE	Conformité Européenne—The European emissions control standard. The CE mark certifies that a product complies to relevant CE regulations. CE is a common standard for all countries in the EU (European Union).
CH	channel
channel	Pin or wire lead to which you apply or from which you read an analog or digital signal. Analog signals can be single-ended or differential. For digital signals, channels group to form ports. Ports usually consist of either four or eight digital channels.
chassis	The enclosure that houses, powers, and controls SCXI modules.
CJ TEMP	cold-junction temperature sensor signal
CJC	cold-junction compensation
CLK	clock input signal
CMRR	common-mode rejection ratio—A measure of the capability of an instrument to reject a signal that is common to both input leads.
code width	The smallest detectable change in an input voltage of a DAQ device.
cold-junction compensation	A method of compensating for inaccuracies in thermocouple circuits.
common-mode voltage	Voltage that appears on both inputs of a differential amplifier.
cutoff frequency	The frequency at which the filter attenuates the input 3 dB, or half of its original power.

D

D/A	digital-to-analog
D*/A	data/Address
D GND	digital ground signal

DAQ	Data acquisition—(1) collecting and measuring electrical signals from sensors, transducers, and test probes or fixtures and inputting them to a computer for processing; (2) collecting and measuring the same kinds of electrical signals with A/D and/or DIO boards plugged into a computer, and possibly generating control signals with D/A and/or DIO boards in the same computer.
DAQ device	A device that collects signals for data acquisition. Examples are E/M/X Series DAQ devices and the SCXI-1600 module.
dB	decibel—The unit for expressing a logarithmic measure of the ratio of two signal levels: $dB = 20 \log_{10} (V1/V2)$, for signals in volts.
DC	direct current
device	A plug-in data acquisition board, module, card, or pad that can contain multiple channels and conversion devices.
differential input	An input circuit that actively responds to the difference between two terminals, rather than the difference between one terminal and ground.
DIN	deutsche Industrie Norme
DIO	digital I/O
DMM	digital multimeter—A digital instrument capable of measuring several different fundamental electrical characteristics, most often voltage, resistance, and current.

E

EEPROM	electrically erasable programmable read-only memory—ROM that can be erased with an electrical signal and reprogrammed.
EMC	electromechanical compliance
EMI	electromagnetic interference

F

filtering	A type of signal conditioning that allows you to remove unwanted signal components from the signal you are trying to measure.
FSR	full-scale range

G

gain	The factor by which a signal is amplified, sometimes expressed in decibels.
gain accuracy	A measure of deviation of the gain of an amplifier from the ideal gain.
gain error	*See* gain accuracy.
GND	ground

H

Hz	hertz

I

I/O	input/output—The transfer of data to/from a computer system involving communications channels, operator interface devices, and/or data acquisition and control interfaces.
in.	inch
input bias current	The current that flows into the inputs of a circuit.
input impedance	The measured resistance and capacitance between the input terminals of a circuit.

isolation — A type of signal conditioning in which you isolate the transducer signals from the computer for safety purposes. Isolating the signals protects you and your computer from large voltage spikes and makes sure the measurements from the DAQ device are not affected by differences in ground potentials.

isothermal — Maintenance of constant temperature across an area. Isothermal construction of terminal blocks increases thermocouple measurement accuracy.

K

K — kelvin

L

linearization — A type of signal conditioning in which software linearizes the voltage levels from transducers, so the voltages can be scaled to measure physical phenomena.

M

m — meters

M — (1) Mega, the standard metric prefix for 1 million or 10^6, when used with units of measure such as volts and hertz; (2) mega, the prefix for 1,048,576, or 2^{20}, when used with B to quantify data or computer memory.

M TEMP — multiplexed temperature sensor signal. *See also* CJ TEMP.

max — maximum

min — (1) minutes
(2) minimum

MIO — multifunction I/O

multiplex — To assign more than one signal to a channel.

multiplexed mode — An SCXI operating mode in which analog input channels are multiplexed into one module output so that your cabled DAQ device has access to the module's multiplexed output as well as the outputs on all other multiplexed modules in the chassis through the SCXIbus.

mux — multiplexer—A switching device with multiple inputs that sequentially connects each of its inputs to its single output, typically at high speeds, in order to measure several signals with a single analog-to-digital converter.

N

NC — not connected

NI-DAQ — The driver software needed to use National Instruments DAQ devices and SCXI components.

noise — Analog. Unwanted signals. Noise comes from both external sources, such as the AC power line, motors, generators, transformers, fluorescent lights, soldering irons, CRT displays, computers, electrical storms, welders, and radio transmitters, and internal sources, such as digital clocks, microprocessors, and switched mode power supplies. Video system noise can take various forms, including snow, which is a random video noise. It corrupts signals you are trying to send or receive.

O

offset error — A constant error added to a measurement along the whole transfer curve. For example, in mx+b, the offset error is b.

offset null compensation — The provision in strain-gauge signal conditioning hardware to remove the unwanted offset voltage present at the output of a strain-gauge bridge when no strain is applied.

P

parallel mode — A type of SCXI operating mode in which the module sends each of its output channels directly to a separate analog input channel of the DAQ device connected to the module.

passband — The range of input frequencies that are passed to the filter output without attenuation.

ppm	parts per million
PXI	A rugged, open system for modular instrumentation based on CompactPCI, with special mechanical, electrical, and software features. The PXIbus standard was originally developed by National Instruments in 1997, and is now managed by the PXIbus Systems Alliance.

R

resolution	The smallest signal increment that can be detected by a measurement system. Resolution can be expressed in bits, in proportions, or in percent of full scale. For example, a system has 12-bit resolution, one part in 4,096 resolution, and 0.0244% of full scale.
RMA	return material authorization
rms	root mean square
RSVD	reserved bit/signal
RTI	referred to input—Calculates a specification relative to the input range.

S

s	seconds
sample	An instantaneous measurement of a signal, normally using an analog-to-digital converter in an E/M/X Series DAQ device.
sample rate	The number of samples a system takes over a given time period, usually expressed in samples per second.
scan	One or more analog or digital input samples. Typically, the number of input samples in a scan is equal to the number of channels in the input group. For example, one pulse from the scan clock produces one scan which acquires one new sample from every analog input channel in the group.
SCANCLK	Scan clock signal used to increment the next channel after each E Series DAQ device analog-to-digital conversion.

SCXI	Signal Conditioning eXtensions for Instrumentation—the National Instruments product line for conditioning low-level signals within an external chassis near sensors so only high-level signals are sent to DAQ boards in the noisy computer environment.
SCXIbus	The analog bus where SCXI analog signals are routed.
SER CLK	A serial clock signal used to synchronize digital data transfers over the SER DAT IN and SER DAT OUT lines.
SER DAT IN	serial data input signal
SER DAT OUT	serial data out to cabled DAQ device
sensor	A device that responds to a physical stimulus (heat, light, sound, pressure, motion, flow, and so on), and produces a corresponding electrical signal. Primary characteristics of sensors are sensitivity, frequency range, and linearity.
settling time	The time required for an amplifier, relays, or other circuits to reach a stable mode of operation.
shunt	*See* autozero.
shunt calibration	The method of calibrating the gain of strain-gauge data acquisition channel by placing a resistor of known value in parallel with a bridge element.
signal conditioning	The manipulation of signals to prepare them for digitizing.
Slot 0	The first slot in a VXI or SCXI system.
strain	The relative deformation of an object subjected to stress. Hence, strain is dimensionless.
SYNC	synchronization pulse for scanning
system noise	A measure of the amount of noise seen by an analog circuit or an ADC when the analog inputs are grounded.

T

thermocouple	A temperature sensor created by joining two dissimilar metals. The junction produces a small voltage as a function of the temperature.
typ	typical

U

UL	Underwriters Laboratory

V

V	volts
VDC	volts direct current
VI	virtual instrument—(1) a combination of hardware and/or software elements, typically used with a computer, that has the functionality of a classic standalone instrument (2) a LabVIEW software module (VI), which consists of a front panel user interface and a block diagram program.
virtual channels	Channel names that can be defined outside of the application and used without having to perform scaling operations. Virtual channels are called custom channels in MAX 3.0 and later.
voltage excitation	A source that supplies the voltage needed by a sensor for its proper operation.
V_{rms}	volts, root mean square

W

working isolation	A level of protection pertaining to a working voltage.
working voltage	The highest voltage that should be applied to a product in normal use, normally well under the breakdown voltage for safety margin.

Index

A

absolute accuracy, A-3
AC and DC voltage connections, 2-1
    AC-coupling, 2-4
    floating AC-coupled signal connection (figure), 2-4
    floating signal, 2-3
    floating signal connection (figure), 2-3
    front signal connector
        figure, 2-6
        table, 2-6
    ground-referenced AC-coupled signal connection (figure), 2-4
    ground-referenced signal, 2-2
    ground-referenced signal connection (figure), 2-2
analog input channels on DAQ device, D-2

C

C language
    multiplexed scanning operations, 5-27
    parallel scanning operations, 5-28
    scanning channels, D-4
calibration
    gain values and input limits (table), 5-31
    one-point offset calibration, 5-31
    overview, 5-30
    two-point gain and offset calibration, 5-32
channel string
    calgnd channel string, D-3
    SCXI, 5-25
    virtual, 5-26
channels
    C language scanning, D-4
    questions about, D-3
    unused analog input channels on DAQ device, D-2
common questions, D-1
configuration
    troubleshooting self-test verification, 1-7
configuration settings
    filter bandwidth, 3-1, 4-2
    gain, 3-1, 4-1
connecting SCXI-1125 to DAQ device
    See also DAQ devices
    for parallel scanning, 1-5
connectors
    front signal connector
        pin assignments
            figure, 2-6
            table, 2-6
    rear signal connector
        description, 2-7
        pin assignments
            figure, 2-8
            table, 2-8
conventions used in the manual, *iv*

D

DAQ device
    connecting to SCXI-1125 for multiplexed scanning
        in PXI combination chassis, 1-5, 3-2
        in SCXI chassis, 1-4, 3-2
    connecting with SCXI-1125
        for parallel scanning, 1-5
    unavailable digital lines, D-2
    unused analog input channels, D-2

DC voltage connections. *See* AC and DC voltage connections
digital lines, unavailability on DAQ device, D-2
digital signals on SCXI-1125 (table), D-3
documentation
    conventions used in the manual, *iv*

E

environmental specifications, A-8

F

filter setting, changing, D-4
filters
    bandwidth configuration, 3-1, 4-2
floating signal connections
    AC-coupled signal connection (figure), 2-4
    description, 2-3
front signal connector
    pin assignments
        figure, 2-6
        table, 2-6

G

gain
    configuration, 3-1, 4-1
ground-referenced signal connections
    AC-coupled signal connection (figure), 2-4
    description, 2-2

H

high-voltage measurements, 5-4

I

input characteristics, A-1
installation
    connecting SCXI-1125 to DAQ device for parallel scanning, 1-5
    connecting to DAQ device for multiplexed scanning
        in PXI combination chassis, 1-5, 3-2
        in SCXI chassis, 1-4, 3-2
    into SCXI chassis, 1-4
    removing SCXI-1125
        from Measurement & Automation Explorer, C-1
        from SCXI chassis, C-1

L

LabVIEW
    multiplexed scanning operations
        SCXI channel string, 5-25
        virtual channel string, 5-26
    parallel scanning operations, 5-28
low-level DAQ functions, in multiplexed scanning, 5-28

M

maximum working voltage, A-8
Measurement & Automation Explorer
    removing SCXI-1125, C-1
    self-test verification
        troubleshooting, 1-7
multiplexed mode
    operating in, 4-2
    performing scans, 5-27
        C and low-level DAQ functions, 5-28
    rear signal connector pin assignments
        figure, 2-8
        table, 2-8
    theory of multiplexed hardware operation, 4-3

using software for scanning operations
LabVIEW and SCXI channel string, 5-25
LabVIEW and virtual channel string, 5-26
multiplexed mode operation
connecting to SCXI-1125 for DAQ device
in PXI combination, 1-5, 3-2
in SCXI chassis, 1-4, 3-2

N

NI-DAQ version required, D-2

P

parallel mode
connecting SCXI-1125 to DAQ device, 1-5
theory of parallel hardware operation, 4-4
using software for scanning
C and parallel mode, 5-29
LabVIEW and parallel mode, 5-28
physical specifications, A-7
pin assignments
front connector (table), 2-6
PXI combination chassis, 1-5, 3-2

R

rear signal connector
description, 2-7
pin assignments
figure, 2-8
table, 2-8
removing SCXI-1125
from Measurement & Automation Explorer, C-1
from SCXI chassis, C-1

S

SCXI channel string, 5-25
SCXI chassis
connecting SCXI-1125 to DAQ device, 1-4, 3-2
SCXI-1125
calibration, 5-30
common questions, D-1
digital signals (table), D-3
multiplexed mode, 4-2
parallel mode, 4-4
signal connections, 2-1
specifications, A-1
self-test verification
troubleshooting, 1-7, D-2
signal connections
See also connectors
AC and DC voltage connections, 2-1
AC-coupling, 2-4
floating AC-coupled signal connection (figure), 2-4
floating signal, 2-3
floating signal connection (figure), 2-3
front signal connector (figure), 2-6
ground-referenced AC-coupled signal connection (figure), 2-4
ground-referenced signal, 2-2
ground-referenced signal connection (figure), 2-2
digital signals (table), D-3
front connector
pin assignments (table), 2-6
overview, 2-1
temperature sensor connection, 2-7

software
multiplexed scanning operations, 5-24
LabVIEW and SCXI channel string, 5-25
LabVIEW and virtual channel string, 5-26
parallel scanning operations
C and parallel mode, 5-29
LabVIEW and parallel mode, 5-28
specifications
absolute accuracy, A-3
environmental, A-8
input characteristics, A-1
maximum working voltage, A-8
physical, A-7
stability, A-6
transfer characteristics, A-6
stability specifications, A-6

T

temperature measurements using thermocouples, 5-1
accurate method for temperature determination, 5-2
guide for calculating overall temperature error, 5-3
overview, 5-1
temperature sensor connection, 2-7
thermocouples for temperature measurements. *See* temperature measurements using thermocouples
transfer characteristics, A-6
troubleshooting
NI resources. *See* common questions
self-test verification, 1-7

V

verifying and self-testing the configuration
troubleshooting, 1-7
virtual channel string, 5-26